7462SH1

CONFIDENTIAL NOTICE: This drawing and the designs, specifications and engineering information disclosed hereon are the property of Eberhard Manufacturing Company and are not to be disseminated or reproduced without express written consent. The drawing is loaned in confidence and then only for consideration of the matter disclosed hereon. In accepting loan of this drawing, recipient agrees to keep it and the matter disclosed hereon in confidence and not to use nor permit their use in any way detrimental to Eberhard Manufacturing Company, Division of the Eastern Company. 21944 Drake Road, Cleveland, Ohio 44149-9712 © 2001 EBERHARD MFG. CO.

NOTE:

1.) FINISH: (25) ZINC PLATE
(23) E-COAT
(13) GALVANIZED ZINC

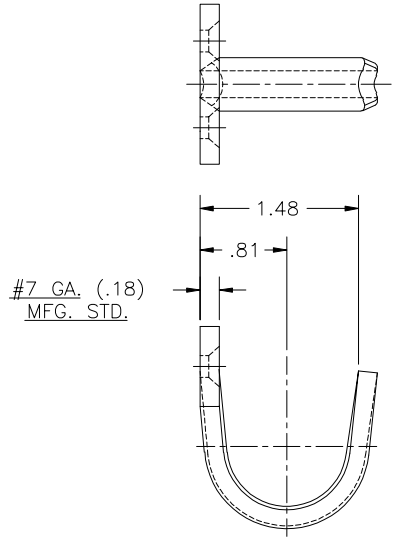

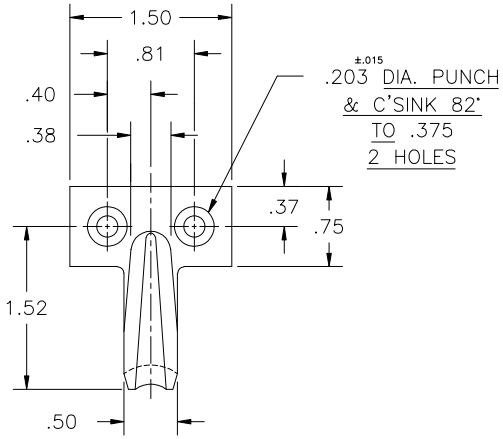

CUSTOMER PRINT
SHEET 1 OF 2

SUPERSEDES DRAWING 7462 SHEET 1 OF 2 DATED 1-28-97.

NO.	CHANGE	ENG.NO.	DATE
	REVISED AND REDRAWN	EN 5011	8-31-01

UNLESS OTHERWISE SPECIFIED TOLERANCES ARE AS FOLLOWS:

ANGLES:	±2°
2 PLACE DEC.:	±.03
3 PLACE DEC.:	±.060
ALL HOLES:	±.005

DATE 8-28-01
DR.BY CMB
SCALE 1:1
CHK.BY

EBERHARD MANUFACTURING CO.
DIVISION OF
THE EASTERN COMPANY
CLEVELAND, OHIO 44149-9712

NAME: HOOK

MATERIAL: H.S.L.A. STEEL

PART NUMBER: 7462