Eberhard Manufacturing Company

Power-Up *Plus* Locking System With Light Feature and Built-In Alarm Operations and Applications Manual

This Manual and its entire contents disclosed herein are the property of the Eberhard Manufacturing Company, Division of The Eastern Company, and are not to be reproduced without written consent of Eberhard.

Some or all of the products (or configurations thereof) shown in this catalog may be covered by one or more U.S. or foreign design or utility patents, common law trademarks, and/or federally registered trademarks.

Drawings and dimensions shown in this catalog are for reference only. For manufacturing production or tooling purposes, obtain current engineering print from factory.

THE EASTERN COMPANY

P.O. Box 460
Naugatuck, Connecticut 06770-0460
Phone: (203) 729-2255
Fax: (203) 723-8653
E-Mail: ir@easterncompany.com
www.easterncompany.com
ASE: EML

A Division of the Eastern Company

EBERHARD MANUFACTURING COMPANY

21944 Drake Road
Cleveland, Ohio 44149
Phone: (440) 238-9720
Toll Free: (800) 334-6706
Fax: (440) 572-2732
www.eberhard.com

A Wholly Owned Subsidiary of The Eastern Company

EBERHARD HARDWARE MFG., LTD.

Box 367
Tilsonburg, Ontario N4G 4H8
Phone: (519) 842-8457
Toll Free: (800) 567-3344
Fax: (519) 688-0575
www.eberhardcanada.com
ISO 9001 Registered

© 2019, Eberhard Mfg. Company, A Division of the Eastern Company

Table of Contents:

Supplied Hardware:

- Standard System – 7 Compartment Door Locks: ..... Page 1-2
- Expanded System – 18 Compartment Door Locks: ..... Page 2
- Options: ..... Page 3

System Protection:

- Electrical Protection: ..... Page 4
- System Protection: ..... Page 4
- Dome Light Function: ..... Page 4
- 16720-1 Power Actuator Specifications: ..... Page 4
- 16835-1 Power Actuator with Internal Switch Specifications: ..... Page 4
- 16835-15 Key Fob (Transmitter) Specifications: ..... Page 4
- 16835-27 Door Jamb Switch: ..... Page 5

Wiring Breakdown:

- Base System with (7) Compartment Door Locks: ..... Page 6
- Expansion System with (11) Compartment Door Locks: ..... Page 6
- Expansion System with (8) to (18) Compartment Door Locks: ..... Page 6
- 16835-4 Control Module and 16835-21 Antenna: ..... Page 6
- 16835-4 Control Module and 16835-22 Siren: ..... Page 6
- 16835-4 Control Module and 16835-23 Actuator Harness: ..... Page 6
- 16835-4 Control Module and 16835-SS24 LED Harness: ..... Page 6
- 16835-4 Control Module and 1-16720-6 Cab Wire Harness: ..... Page 6-7
- 2-16720-7 Compartment Wire Harness: ..... Page 8
- 2-16720-8 Expansion Relay Wire Harness: ..... Page 8
- 2-16720-9 Expansion Compartment Wire Harness: ..... Page 9
- 2-16720-10 Expansion Compartment Wire Harness: ..... Page 9
- 2-16720-7X Wire Harness for Door Jamb Switch: ..... Page 10
- 2-16720-10X Wire Harness for Door Jamb Switch: ..... Page 10
- 16720-1 Power Actuator: ..... Page 10
- 16835-1 Power Actuator with Internal Switch: ..... Page 11
- 16835-27 Door Jamb Switch: ..... Page 11
- 16746-U Power 3 Way Toggle Switch Kit W/Connectors: ..... Page 11-12
- 1-16746-U Illuminated Power 3 Way Toggle Switch Kit W/Connectors: ..... Page 12-13

Miscellaneous:

- Setting for Positive or Negative Polarity: ..... Page 14
- Programming the Key Fobs: ..... Page 14
- Replacement Components: ..... Page 14

Drawings:

- Power-Up Component Drawings: ..... Page 15-35
- Power Locking Key Cylinder: ..... Page 36

Eberhard Manufacturing Company
POWER-UP Locking System with Built-In Alarm
Supplied Hardware

Base System for (7) compartment door locks:

16835-U Power Locking System with Dome Light Feature and Alarm Function – Less Alarm Components:

- **16835-50PK Control Module W/2 Key Fob (Transmitters), Antenna, Dome Light Feature and Built-in Alarm**
  Includes: 16835-4 Control Module W/Dome Light Feature and Built-in Alarm – Qty. (1)
  16835-21 Antenna – Qty. (1)
  16835-15 Key Fob (Transmitter) – Qty. (2)
- **16720-1 Power Actuator – Qty. (7)**
- **16720-2 Power Actuator Mtg. Screws – Phillips Pan Head #8-18 Type "AB" Thread – Qty. (14)**
- **16720-3 Connecting Rod – Qty. (7)**
- **16619-15PK Rod Adapter W/Set Screw – Qty. (7)**
- **1-16720-6 Cab Wire Harness with Dome Light Feature – Qty. (1)**
  Provides independent power locking for compartment doors
  Provides optional connection to OEM power locking system using OEM fob (transmitter)
  Provides optional power for dome light feature
- **2-16720-7 Compartment Wire Harness with Dome Light Feature – Qty. (1)**
  Provides (3) actuators for road side – (4) actuators for curb side
  Provides power leads for self-grounding dome lights

ALM-16835-RTU Add-On Alarm System Components:

- **16835-1 Power Actuator with Internal Switch – Qty. (1)**
  Replaces (1) 16720-1 Power Actuator in main compartment
  Provides a manual key override for all actuators
- **16835-56 Harness Kit, Actuator W/Internal Switch Harness and LED Harness**
  Includes: 16835-23 Actuator W/Internal Switch Harness – Qty. (1)
  16835-SS24 LED Harness – Qty. (1)
- **16835-22 Siren – Qty. (1)**
  Siren Decibels: 117 ± 3 db
  Has 3 cycles, 30 seconds each with (6) varying audible tones
- **16835-27 Door Jamb Switch – Qty. (7)**
- **2-16720-7X Wire Harness for Door Jamb Switch – Qty. (1)**
  Provides a negative trigger input for up to (6) door jamb switches to the control module

These components are to be used in addition to the 16835-U Remote Power Locking System components to add the alarm system function.

Eberhard Manufacturing Company
POWER-UP Locking System with Built-In Alarm
Supplied Hardware

ALM-16835-U Power Locking System with Alarm and Dome Light Feature:

- **16835-50PK Control Module W/2 Key Fob (Transmitters), Antenna, Dome Light Feature and Built-in Alarm**
  Includes: 16835-4 Control Module W/Dome Light Feature and Built-in Alarm – Qty. (1)
  16835-21 Antenna – Qty. (1)
  16835-15 Key Fob (Transmitter) – Qty. (2)
- **16720-1 Power Actuator – Qty. (6)**
- **16835-1 Power Actuator with Internal Switch – Qty. (1)**
  Provides a manual key override for all actuators
- **16720-2 Power Actuator Mtg. Screws – Phillips Pan Head #8-18 Type "AB" Thread – Qty. (14)**
- **16720-3 Connecting Rod – Qty. (7)**
- **16619-15PK Rod Adapter W/Set Screw – Qty. (7)**
- **16835-56 Harness Kit, Actuator W/Internal Switch Harness and LED Harness**
  Includes: 16835-23 Actuator W/Internal Switch Harness – Qty. (1)
  16835-SS24 LED Harness – Qty. (1)
- **16835-22 Siren – Qty. (1)**
  Siren Decibels: 117 ± 3 db
  Has 3 cycles, 30 seconds each with (6) varying audible tones
- **16835-27 Door Jamb Switch – Qty. (7)**
- **1-16720-6 Cab Wire Harness with Dome Light Feature – Qty. (1)**
  Provides independent power locking for compartment doors
  Provides optional connection to OEM power locking system using OEM fob (transmitter)
  Provides optional power for dome light feature
- **2-16720-7 Compartment Wire Harness with Dome Light Feature – Qty. (1)**
  Provides (3) actuators for road side – (4) actuators for curb side
  Provides power leads for self-grounding dome lights
- **2-16720-7X Wire Harness for Door Jamb Switch – Qty. (1)**
  Provides a negative trigger input for up to (6) door jamb switches to the control module

This is a complete system that provides both power locking with dome light feature and alarm.

Expansion System for (18) compartment door locks:

- **2-16720-8 Expansion Relay Harness with Dome Light Feature – Qty. (1)**
- **2-16720-9 Expansion Compartment Wire Harness with Dome Light Feature – Qty. (1)**
  *** Requires 2-16720-8 Expansion Relay Harness with Dome Light Feature**
  Adds an additional (6) actuators for road side – (5) actuator for curb side
  Provides for a total of (9) actuators for road side – (9) actuator for curb side total

Eberhard Manufacturing Company
POWER-UP Locking System with Built-In Alarm
Supplied Hardware

Options:

- **2-16720-10 Expansion Compartment Wire Harness with Dome Light Feature – Qty. (1)**
  Adds (2) actuators per side to 2-16720-7 compartment Wire Harness
  *** Does not require 2-16720-8 Expansion Relay Harness with Dome Light Feature**
  Provides for a total of (5) actuators for road side – (6) actuators for curb side total
- **2-16720-10X Wire Harness for Door Jamb Switch – Qty. (1)**
  Provides a negative trigger input for an additional (4) door jamb switches to the control module
  *** Requires 2-16720-7X Wire Harness for Door Jamb Switch**
- **16746-U Power 3 Way Toggle Switch Kit W/Connectors – Qty. (1)**
  Provides a non-illuminated toggle switch for the compartment door locks to a cab without an OEM power locking system
  Includes: 3 Way Toggle Switch, non-illuminated – Qty. (1)
  Trim Plate – Qty. (1)
  Wire Harness – Qty. (1)
  Butt Splice Connector – Qty. (2)
  Insulated Ring Terminal for #10 Stud – Qty. (1)
- **1-16746-U Power 3 Way Toggle Switch Kit W/Connectors – Qty. (1)**
  Provides an illuminated toggle switch for the compartment door locks to a cab without an OEM power locking system
  Includes: 3 Way Toggle Switch, illuminated – Qty. (1)
  Trim Plate – Qty. (1)
  Wire Harness – Qty. (1)
  Butt Splice Connector – Qty. (2)
  Insulated Ring Terminal for #10 Stud – Qty. (2)

Eberhard Manufacturing Company
POWER-UP Locking System with Built-In Alarm
System Protection

Electrical Protection:

- **16835-4 Control Module: Provides over-trigger protection for power actuators**
- **1-16720-6 Cab Wire Harness: In-line fuse protection – 40 amp for output, 5 amp for processor & 15 amp for lights**
- **2-16720-8 Expansion Relay Wire Harness: Individual relay for each side of the vehicle. In-line fuse protection – 40 amp for power**

System Protection:

- **16835-4 Control Module W/Dome Light Feature and Built-in Alarm:**
  - ► **Incorporates a "Lock Pulse Timer" to provide a 0.4 second pulse from the control module to the actuators. If the buttons on the key fob are held down for an extended period, the "Lock Pulse Timer" will prevent the actuators from being damaged by over firing.**
  - ► **Incorporates a "Time Out" feature that prevents damage to the actuators by shutting down the system for 30 seconds if the buttons on the key fob are activated more than 8 times in a 30 second period. After the 30 second "Time Out" period, the system will function as normal.**
  - ► **Can hold up to (4) key fobs with different signals. If any key fobs are lost or damaged and needs to be replaced, the control module can learn/program new and/or additional key fobs.**
  - ► **Can be set-up for use in either positive or negative polarity.**

- **16835-4 Control Module – Dome Light Function:**
  - ► **Incorporates a feature to activate/deactivate dome lights for up to 18 compartments. On the key fob, when Button #2 (Unlock) is depressed, the dome lights will be activated for 10 minutes. When Button #1 (Lock) is depressed, the dome lights will be turned off. Optionally, when Button #1 (Lock) and Button #3 (N/A) are depressed at the same time, the dome lights will be activated for 10 minutes. By depressing Button #1 (Lock) and Button #4 (N/A) at the same time, the dome lights will be turned off.**

- **16720-1 Power Actuators:**
  - ► **Working voltage: 8.8 VDC to 13.7 VDC**
  - ► **Current absorption: 4.5 A (Max.)**
  - ► **Temperature range: -18.4° F to +188.6° F**
  - ► **Power: 7.8 lbf.**

- **16835-1 Power Actuator with Internal Switch:**
  - ► **Same specifications as 16720-1 Power Actuator**
  - ► **Has an internal switch for manual key override for all actuators**

- **16835-15 Key Fob (Transmitter):**
  - ► **Working range of 150 feet. Maximum**
  - ► **Frequency = 433.92 MHz, Rolling Code**
  - ► **Separate "Lock" & "Unlock" Buttons**

16835-27 Door Jamb Switch:

- Normally closed SPST door jamb switch operating force: 1.5 kgf [14.7N/3.3 lbf]
- Contact rating: 5A, 12VDC (wiping contact)
- Initial voltage drop: <100mV
- Endurance: 50,000 cycles @ 5A, 12.8VDC (lamp load)
- Operating Temperature: -33°C to +62°C
- Salt spray test: 50 hrs. (ASTM-B-117)
- Connector: W-ST1-013
- Terminal: W-ST-710-S

Eberhard Manufacturing Company
POWER-UP Locking System with Built-In Alarm
Wiring Breakdown

Locate and mount 16835-4 Control module in a high position in front drivers' side compartment. Make sure the control module is in a position where it will not be damaged or come into contact with water.

Make wire connections as noted below:

For base system with (7) compartment door locks, connect wire harnesses as follows:
16835-4 Control Module to 1-16720-6 Cab Wire Harness to 2-16720-7 Compartment Wire Harness.

For system with (11) compartment door locks, connect wire harnesses as follows:
16835-4 Control Module to 1-16720-6 Cab Wire Harness to 2-16720-7 Compartment Wire Harness to 2-16720-10 Expansion Compartment Wire Harness.

For system with (8) to (18) compartment door locks, connect wire harnesses as follows:
16835-4 Control Module to 1-16720-6 Cab Wire Harness to 2-16720-8 Expansion Relay Wire Harness to 2-16720-7 Compartment Wire Harness to 2-16720-9 Expansion Compartment Wire Harness.

16835-4 Control Module and 16835-21 Antenna:

3 Pin JST Style Connector (male) to interface with the 3 Pin JST Style Connector (female) on the side of the control module

16835-4 Control Module and 16835-22 Siren:

2 Pin Connector (male) to interface with the 2 Pin Connector (female) on the side of the control module

16835-4 Control Module and 16835-23 Actuator with Internal Switch Harness:

4 Pin Connector (male) to interface with the 4 Pin Connector (female) on the side of the control module

16835-4 Control Module and 16835-SS24 LED Harness:

2 Pin JST Style Connector (male) to interface with the 2 Pin JST Style Connector (female) on the side of the control module

16835-4 Control Module and 1-16720-6 Cab Wire Harness with Dome Light Feature:

Terminal connections from outer terminal towards the center on control module:

- **Terminal #1: Blue Wire – Motor connection for actuators – 12 ga. wire**
- **Terminal #2: Green Wire – Motor connection for actuators – 12 ga. wire**
- **Terminal #3: Red Wire – Wire connection for power from cab – 14 ga. Wire**
- **Terminal #4: Black Wire – Wire connection for chassis ground (actuators) – 14 ga. wire**
- **Terminal #5: Black Wire – Wire connection for chassis ground (actuators) – 14 ga. wire**

Eberhard Manufacturing Company
POWER-UP Locking System with Built-In Alarm
Wiring Breakdown

10 Pin Connector:

- **Position #1: Black Wire** – Ground – 18 ga. wire
- **Position #2: Blue/White Wire** – Wire connection to OEM actuator, unlock circuit – 18 ga. Wire
  Wire length = 15 feet, non terminated end
  – Optional wire connection to the 16746-U or 1-16746-U unlock circuit (Brown Wire) – 20 ga. Wire
- **Position #3: Dark Green** – Wire connection to optional dome light control circuit – 18 ga. Wire
- **Position #6: Red Wire** – Power – 18 ga. Wire
- **Position #8: Green/White Wire** – Wire connection to OEM actuator, lock circuit – 18 ga. Wire
  Wire length = 15 feet, non terminated end
  – Optional wire connection to the 16746-U or 1-16746-U lock circuit (Purple Wire) – 20 ga. Wire

- **Position #4, #5, #7, #9 & #10 are not used.**

NOTE: Blue/White wire & Green/White wire are for optional connection to OEM power locking system. These wires can be run along with the Red power wire listed below to the cab. Run the wires along the factory wire harness using wire harness holders in the frame rails. Drill and grommet all holes in vehicle as required to prevent accidental grounding.

1-16720-6 Cab Wire Harness with Dome Light Feature:

- **Red Wire** – Wire connection to auxiliary OEM power source in cab – 10 ga. wire
  – Wire length = 16 feet
- **Black Wire** – Wire connection for chassis ground – 10 ga. Wire
  – Wire length = 2 feet
- **End Connector** – Connector (female) on end of cab wire harness to plug into mating connector (male) on 2-16720-7 Compartment Wire Harness or optional 2-16720-8 Expansion Relay Wire Harness.

NOTE: Red power wire can be run along with the optional Blue/White & Green/White OEM power locking connection wires to the cab. Run the wires along the factory wire harness using wire harness holders in the frame rails. Drill and grommet all holes in vehicle as required to prevent accidental grounding.

Eberhard Manufacturing Company
POWER-UP Locking System with Built-In Alarm
Wiring Breakdown

2-16720-7 Compartment Wire Harness with Dome Light feature:
Base System for (7) compartment door locks:

- **Main trunk wires for both road side & curb side are 14 ga.**
- **Branch wires for connection to the actuators are 18 ga.**
- **Branch wires for connection to the dome lights are 14 ga.**

Harness branch wire/power actuator wire connections – Retracting actuator to lock:

- **Green harness wire connects to Blue power actuator wire**
- **Blue harness wire connects to Red power actuator wire**

Harness branch wire/power actuator wire connections – Extending actuator to lock:

- **Green harness wire connects to Red power actuator wire**
- **Blue harness wire connects to blue power actuator wire**

- **End Connector – Connector (male) on end of compartment wire harness to plug into mating connector (female) on 1-16720-6 Cab Wire Harness or optional 2-16720-8 Expansion Relay Wire Harness.**
- **End Connectors – Connectors (female) on end of compartment wire harness to plug into mating connectors (male) on 2-16720-9 Expansion Compartment Wire Harness or optional 2-16720-10 Expansion Compartment Wire Harness.**

NOTE: Drill and grommet all holes in vehicle as required to prevent accidental grounding.

2-16720-8 Expansion Relay Wire Harness with Dome Light Feature:
Expansion onto 2-16720-7 Compartment Wire Harness for (8) to (18) compartment door locks:
Required for 2-16720-9 Expansion Compartment Wire Harness.

- **Red Wire – Wire connection to auxiliary OEM power source in cab – 10 ga. wire**
  – Wire length = 18 feet 2 in.
- **Black Wire – Wire connection for chassis ground – 10 ga. Wire**
  – Wire length = 4 feet

- **End Connector – Connector (male) on end of expansion relay wire harness to plug into mating connector (female) on 1-16720-6 Cab Wire Harness.**
- **End Connectors – Connector (female) on end of expansion relay wire harness to plug into mating connector (male) on 2-16720-7 Compartment Wire Harness.**

NOTES: 1) Drill and grommet all holes in vehicle as required to prevent accidental grounding.
2) Locate and mount relay blocks in a high position in front drivers' side compartment. Make sure the relays are in a position where they can be accessed for replacement if necessary and where they will not be damaged or come into contact with water.

Eberhard Manufacturing Company
POWER-UP Locking System with Built-In Alarm
Wiring Breakdown

2-16720-9 Expansion Compartment Wire Harness with Dome Light Feature:

Expansion onto 2-16720-7 Compartment Wire Harness for (8) to (18) compartment door locks:

Requires 2-16720-8 Expansion Relay Wire Harness.

- **Main trunk wires for both road side & curb side are 14 ga.**
- **Branch wires for connection to the actuators are 18 ga.**
- **Branch wires for connection to the dome lights are 14 ga.**

Harness branch wire/power actuator wire connections – Retracting actuator to lock:

- **Green harness wire connects to Blue power actuator wire**
- **Blue harness wire connects to Red power actuator wire**

Harness branch wire/power actuator wire connections – Extending actuator to lock:

- **Green harness wire connects to Red power actuator wire**
- **Blue harness wire connects to Blue power actuator wire**

- **End Connectors – Connectors (male) on end of expansion compartment wire harness to plug into mating connectors (female) on 2-16720-7 Compartment Wire Harness.**

NOTE: Drill and grommet all holes in vehicle as required to prevent accidental grounding.

2-16720-10 Expansion Compartment Wire Harness with Dome Light Feature:

Expansion onto 2-16720-7 Compartment Wire Harness for (11) compartment door locks:

- **Main trunk wires for both road side & curb side are 14 ga.**
- **Branch wires for connection to the actuators are 18 ga.**
- **Branch wires for connection to the dome lights are 14 ga.**

Harness branch wire/power actuator wire connections – Retracting actuator to lock:

- **Green harness wire connects to Blue power actuator wire**
- **Blue harness wire connects to Red power actuator wire**

Harness branch wire/power actuator wire connections – Extending actuator to lock:

- **Green harness wire connects to Red power actuator wire**
- **Blue harness wire connects to Blue power actuator wire**

- **End Connectors – Connectors (male) on end of expansion compartment wire harness to plug into mating connectors (female) on 2-16720-7 Compartment Wire Harness.**

NOTE: Drill and grommet all holes in vehicle as required to prevent accidental grounding.

Eberhard Manufacturing Company
POWER-UP Locking System with Built-In Alarm
Wiring Breakdown

2-16720-7X Wire Harness for Door Jamb Switch:

- **Main trunk wires for both road side & curb side are 16 ga.**
- **Branch wires for connection to the door jamb switches are 16 ga.**

- **End Connectors – Connectors (female) on ends of branch wires to plug into mating connectors (male) on the 16835-27 Door Jamb Switch.**

- **Butt Connector – Connects wire ends for both road side & curb side to the orange wire (negative input) on the 16835-23 Actuator with Internal Switch Harness.**

2-16720-10X Wire Harness for Door Jamb Switch:

- **Main trunk wires for both road side & curb side are 16 ga.**
- **Branch wires for connection to the door jamb switches are 16 ga.**

- **End Connectors – Connectors (female) on ends of branch wires to plug into mating connectors (male) on the 16835-27 Door Jamb Switch.**

- **End Connectors – Connectors (male) on ends of main trunk to plug into mating connectors (female) on the 2-16720-7X Wire Harness for Door Jamb Switches.**

16720-1 Power Actuator:

- **Actuator wires are 18 ga.**

Harness branch wire/power actuator wire connections – Retracting actuator to lock:

- **Green harness wire connects to Blue power actuator wire**
- **Blue harness wire connects to Red power actuator wire**

Harness branch wire/power actuator wire connections – Extending actuator to lock:

- **Green harness wire connects to Red power actuator wire**
- **Blue harness wire connects to Blue power actuator wire**

NOTES: 1) Drill and grommet all holes in vehicle as required to prevent accidental grounding.
2) Power actuators to be mounted with the protruding motor housing in an upward position to prevent condensation from pooling around the internal motor.

Eberhard Manufacturing Company
POWER-UP Locking System with Built-In Alarm
Wiring Breakdown

16835-1 Power Actuator with Internal Switch:

- **Actuator wires are 18 ga.**
- **Internal switch (Lock) wire - Brown is 18 ga.**
- **Internal switch (Unlock) wire – Purple is 18 ga.**
- **Ground wire – Black is 18 ga.**

16835-1 Power Actuator with Internal Switch and 16835-23 Actuator with Internal Switch Harness:

- **Brown harness wire connects to Brown actuator wire**
- **Purple harness wire connects to Purple actuator wire**
- **Black harness wire connects to Black actuator wire**

Compartment harness branch wire/power actuator wire connections – Retracting actuator to lock:

- **Green harness wire connects to Blue power actuator wire**
- **Blue harness wire connects to Red power actuator wire**

Compartment harness branch wire/power actuator wire connections – Extending actuator to lock:

- **Green harness wire connects to Red power actuator wire**
- **Blue harness wire connects to Blue power actuator wire**

NOTES: 1) Drill and grommet all holes in vehicle as required to prevent accidental grounding.
2) Power actuators to be mounted with the protruding motor housing in an upward position to prevent condensation from pooling around the internal motor.

16835-27 Door Jamb Switch:

- **Self grounding through mounting screw hole**
- **Terminal (male) connects to 2-16720-7X Wire Harness for Door Jamb Switch**

16746-U Power 3 Way Toggle Switch Kit W/Connectors:

Non-illuminated toggle switch for the compartment door locks to a cab without an OEM power locking system.

Locate a position for mounting and cut a .93” wide x 1.74” tall opening to receive the trim plate and toggle switch. Trim plate will fit a panel of .08” to .16” thick.

Eberhard Manufacturing Company
POWER-UP Locking System with Built-In Alarm
Wiring Breakdown

Make wire connections as noted below:

- **Purple Wire – Wire connection to the Green/White lock circuit from the 1-16720-6 Cab Wire Harness – 20 ga. wire**
  Wire length = 3 feet 2-1/2 in.
  Use supplied butt splice connector to make wire connection.
- **Brown Wire – Wire connection to the Blue/White unlock circuit from the 1-16720-6 Cab Wire Harness – 20 ga. Wire**
  Wire length = 3 feet 2-1/2 in.
  Use supplied butt splice connector to make wire connection.
- **Black Wire – Wire connection for chassis ground – 20 ga. Wire**
  Wire length = 3 feet 2-1/2 in.
  Use supplied insulated ring terminal to make wire connection.

NOTES: 1) Drill and grommet all holes in vehicle as required to prevent accidental grounding.
2) Plastic connector on the end of the wire harness is not required. Customer to cut off and discard. Use the supplied butt splice connectors and insulated ring terminal to make the wire connections.
3) Jumpers on the 16835-4 Control Module need to be changed to the negative polarity settings. Position the jumpers located on the bottom end of the control module on the bottom two pins.

1-16746-U Power 3 Way Toggle Switch Kit W/Connectors:

Illuminated toggle switch for the compartment door locks to a cab without an OEM power locking system.

Locate a position for mounting and cut a .93" wide x 1.74" tall opening to receive the trim plate and toggle switch. Trim plate will fit a panel of .08" to .16" thick.

Make wire connections as noted below:

- **Purple Wire – Wire connection to the Green/White lock circuit from the 1-16720-6 Cab Wire Harness – 20 ga. wire**
  Wire length = 3 feet 2-1/2 in.
  Use supplied butt splice connector to make wire connection.
- **Brown Wire – Wire connection to the Blue/White unlock circuit from the 1-16720-6 Cab Wire Harness – 20 ga. Wire**
  Wire length = 3 feet 2-1/2 in.
  Use supplied butt splice connector to make wire connection.
- **Black Wire – Wire connection for chassis ground – 20 ga. Wire**
  Wire length = 3 feet 2-1/2 in.
  Use supplied insulated ring terminal to make wire connection.

Eberhard Manufacturing Company
POWER-UP Locking System with Built-In Alarm
Wiring Breakdown

- **Black Wire – Wire connection for chassis ground – 20 ga. Wire**
  Wire length = 3 feet 2-1/2 in.
  Use supplied insulated ring terminal to make wire connection.
- **Gray Wire – Wire connection to the parking light circuit on the vehicle – 20 ga. Wire**
  Wire length = 3 feet 2-1/2 in.

NOTES: 1) Drill and grommet all holes in vehicle as required to prevent accidental grounding.
2) Plastic connector on the end of the wire harness is not required. Customer to cut off and discard. Use the supplied butt splice connectors and insulated ring terminals to make the wire connections.
3) Jumpers on the 16835-4 Control Module need to be changed to the negative polarity settings. Position the jumpers located on the bottom end of the control module on the bottom two pins.

Eberhard Manufacturing Company
POWER-UP Locking System with Built-In Alarm
Miscellaneous

Setting for positive or negative polarity:

For positive polarity – Standard setting: Position the jumpers located on the bottom end of the control module on the top two pins.

For negative polarity: Position the jumpers located on the bottom end of the control module on the bottom two pins.

Programming the key fobs:

Make sure the system is unlocked and then disconnect the actuator with internal switch wire harness from the control module prior to programming.

Press the program button on the side of the control module (3) times; the red LED will then light up. Press button #1 on all of the key fobs that will be associated with the vehicle, (up to 4 key fobs), within 10 seconds of the red LED lighting up. When the LED light goes off, the key fobs are then programmed to the control module. Then, reconnect the actuator with internal switch wire harness to the control module. Test each key fob by locking and unlocking the system to ensure proper operation. NOTE: All key fobs must be programmed at the same time using this procedure. Programming one key fob at a time will erase the previous programmed key fob.

Replacement Components:

- 1-16720-6 Cab Wire Harness: In-line fuse:
  - Power: 40-Amp fuse – ATC style fuse or equivalent
  - Signal: 5-Amp fuse – ATC style fuse or equivalent
  - Lights: 15-Amp fuse – ATC style fuse or equivalent
  - Dome Light Relay: 30-Amp - Replacement relay p/n: Hella Relay p/n: 49400B or equivalent
- 2-16720-8 Expansion Relay Wire Harness: Individual relay for each side of the vehicle.
  - Relay: 30-Amp - Replacement relay p/n: Hella Relay p/n: 49400B or equivalent
  - Power: 40-Amp fuse – ATC style fuse or equivalent
- 16835-15 Key Fob (Transmitter) Battery: 23AP (12V Alkaline), 23-279 (12V Alkaline) or equivalent

...Manufacturing Company are intended for disclosure of information without express written consent. ...including any of the material disclosed herein or software are not to be used or permitted without any such ...ASSIGNED NO.

REV	
	CONVERTED T

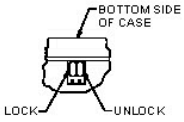

NEGATIVE
POLARITY SETTING

* NOTE: JUMPER SETTINGS FOR POSITIVE OR NEGATIVE POLARITY SYSTEMS.
STANDARD CONTROL MODULE IS SET TO POSITIVE POLARITY SETTING.

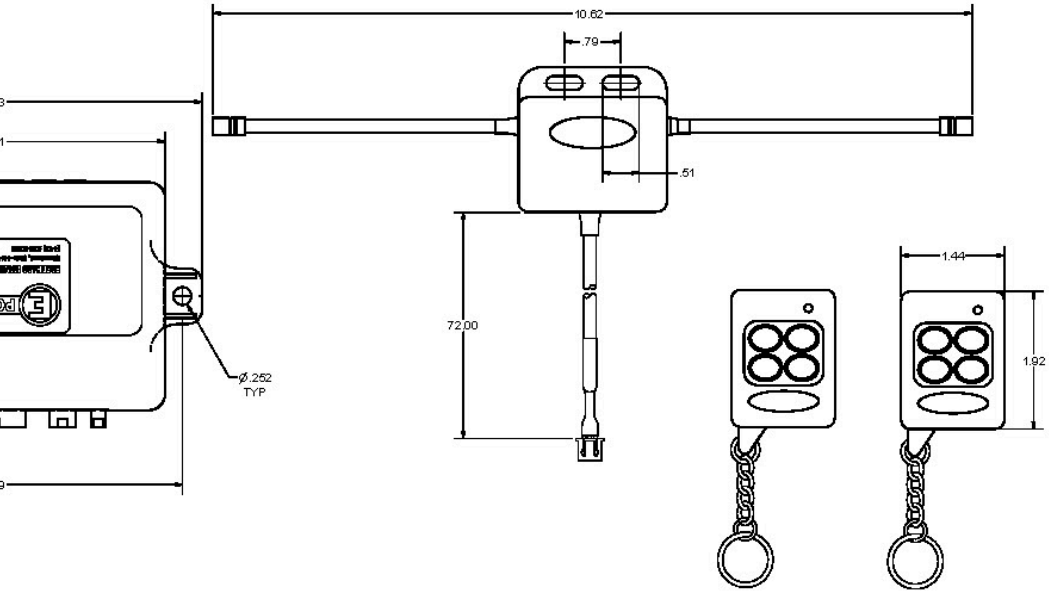

16835-50PK
TROL MODULE W/2 KEY FOB (TRANSMITTERS),
NTENNA, DOME LIGHT FEATURE AND BUILT-IN
ALARM

SUPPLIED WITH 2 KEY FOB
(TRANSMITTERS)
BATTERIES INCLUDED
PROGRAMMED TO CONTROL
MODULE

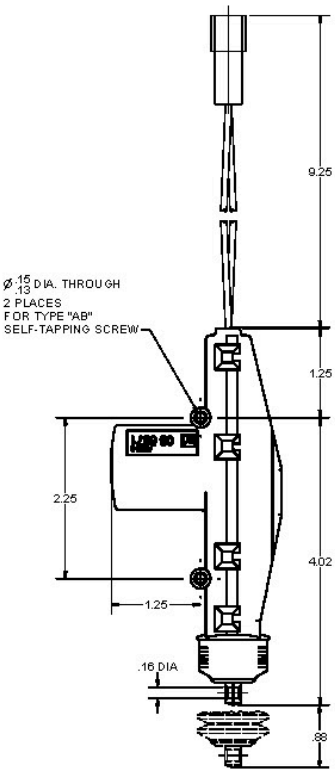

16720-1
POWER
ACTUATOR
7 REQ'D

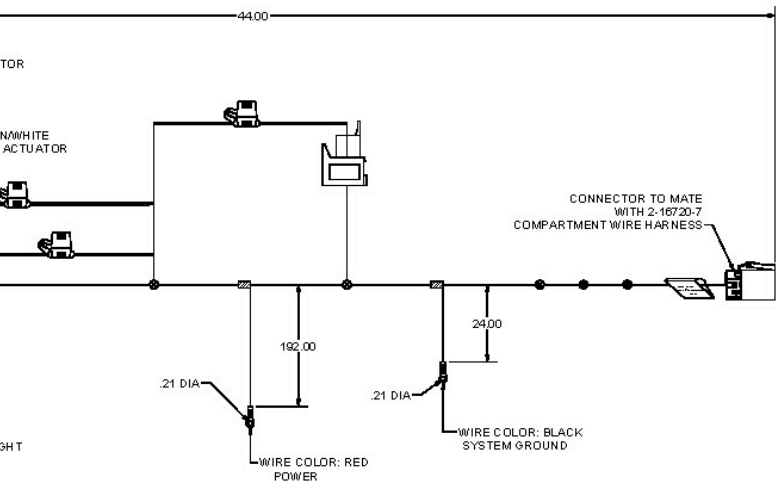

FOR ALARM SYSTEM COMPONENTS: POWER ACTUATOR WITH INTERNAL SWITCH,
ARNESS KIT, SIREN AND REMOTE MAGNETIC WIRELESS ALARM SENSORS,
LSO ORDER PART NUMBER 16835-ALMU SEPARATELY.

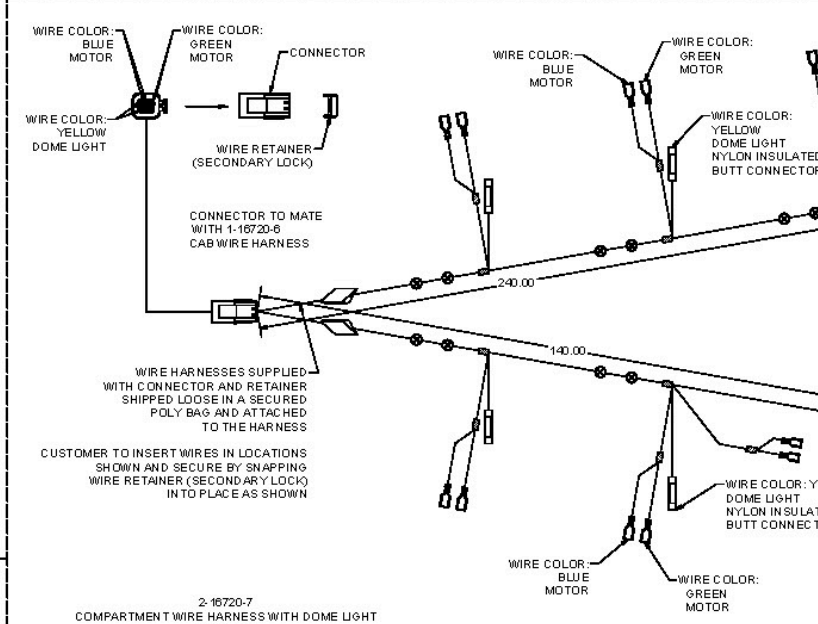

2-16720-7
COMPARTMENT WIRE HARNESS WITH DOME LIGHT
FEATURE
1 REQ'D
(NOT TO SCALE)

UNCONTROLLED COPY

SUPERSEDES DRAWING 16835-U DATED 12-12-05

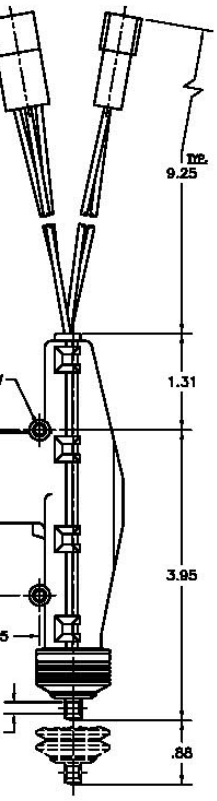

ACTUATOR WITH INTERNAL SWITCH HARNESS

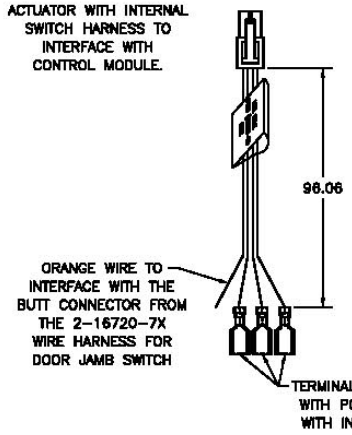

LED HARNESS

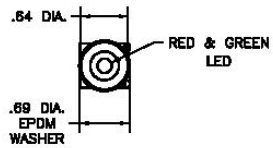

NOTE:
RECOMMENDED HOLE SIZE IN MATING PANEL TO BE .50 DIA.

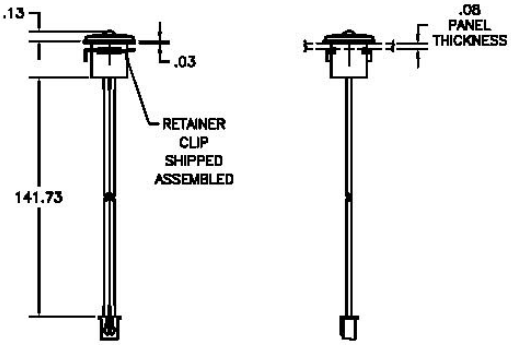

16835-56
HARNESS KIT
ACTUATOR WITH INTERNAL SWITCH HARNESS AND LED HARNESS
1 REQ'D

WIRE HARNESSES
WITH BUTT CON
SHIPPED LOOSE IN
POLY BAG AND
TO THE HAR

CUSTOMER TO SECURE WI
OF THE BUTT CONNECTI
OTHER END TO THE OR
FROM THE 16835-23
INTERNAL SWITCH

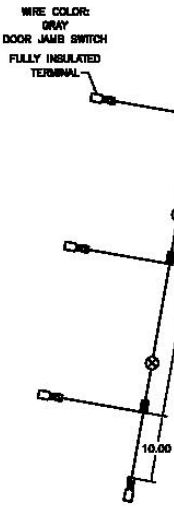

16835-22
SIREN
1 REQ'D

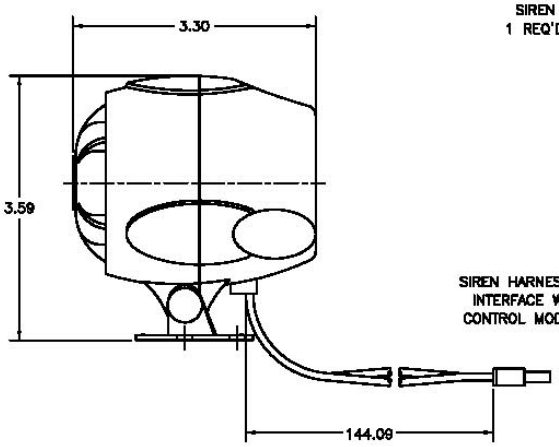

SIREN HARNESS TO INTERFACE WITH CONTROL MODULE.

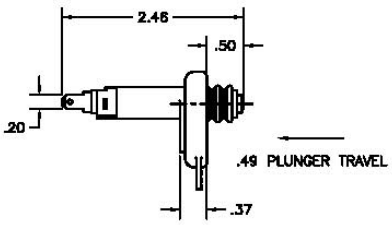

16835-27
DOOR JAMB SWITCH
7 REQ'D

.44

.17 DI
GROUND
SCREW H

NOTE:
THESE COMPONENTS ARE TO BE USED IN ADDITION TO THE 16835-U REMOTE POWER LOCKING SYSTEM COMPONENTS TO ADD THE ALARM SYSTEM FUNCTIONS.

SUPERSEDES DRAWING ALM-16835-RTU DATED 12-12-05.

NO	CHANGE	ENGR.	DATE
	REVISED PER ENGINEER	EE KIM	1-10-07

...property of Code3, Inc. and is not to be disclosed or produced without prior written consent, ... Code3, Inc. U.S.A.

BOTTOM SIDE OF CASE

NEGATIVE POLARITY SETTING

UNLOCK

* NOTE:
JUMPER SETTINGS FOR POSITIVE OR NEGATIVE POLARITY SYSTEMS. STANDARD CONTROL MODULE IS SET TO POSITIVE POLARITY SETTING.

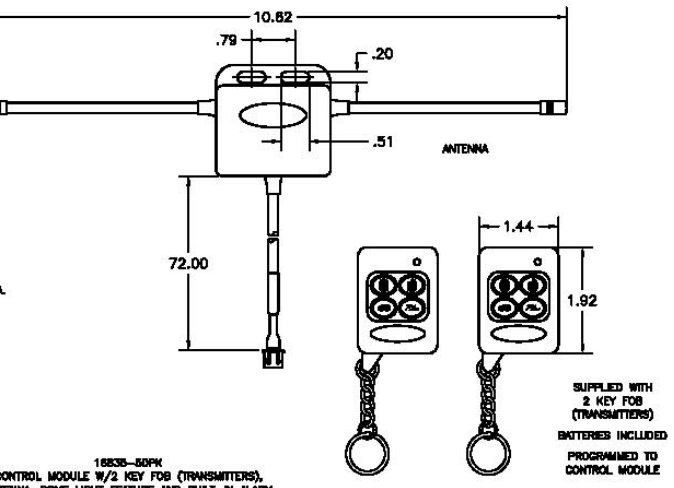

16835-50PK
CONTROL MODULE W/2 KEY FOB (TRANSMITTERS), ANTENNA, DOME LIGHT FEATURE AND BUILT-IN ALARM
1 REQ'D

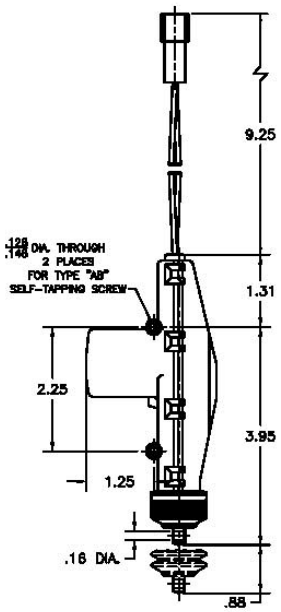

16720-1
POWER ACTUATOR
6 REQ'D

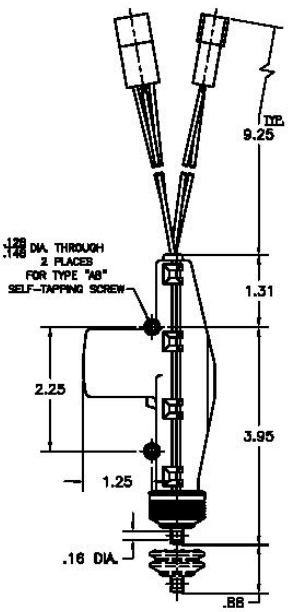

16835-1
POWER ACTUATOR WITH INTERNAL SWITCH
1 REQ'D

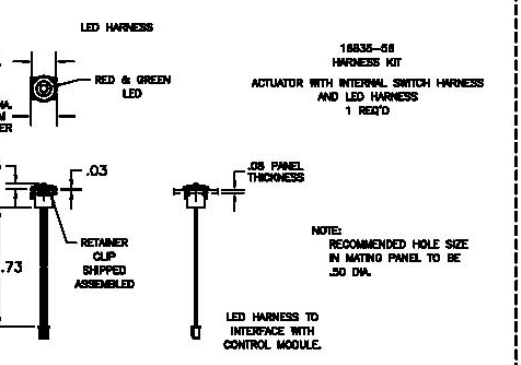

16835-58
HARNESS KIT
ACTUATOR WITH INTERNAL SWITCH HARNESS AND LED HARNESS
1 REQ'D

NOTE:
RECOMMENDED HOLE SIZE IN MATING PANEL TO BE .50 DIA.

LED HARNESS TO INTERFACE WITH CONTROL MODULE.

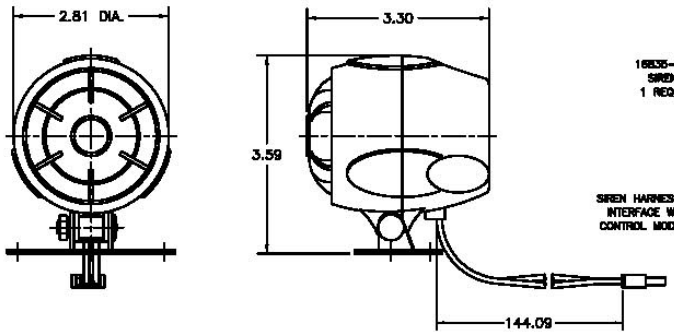

16835-22
SIREN
1 REQ'D

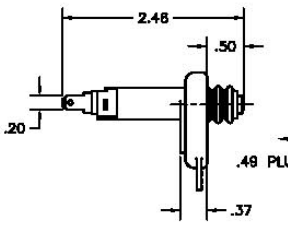

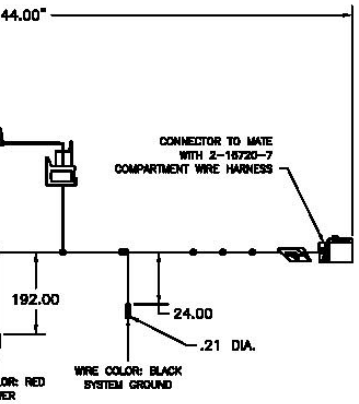

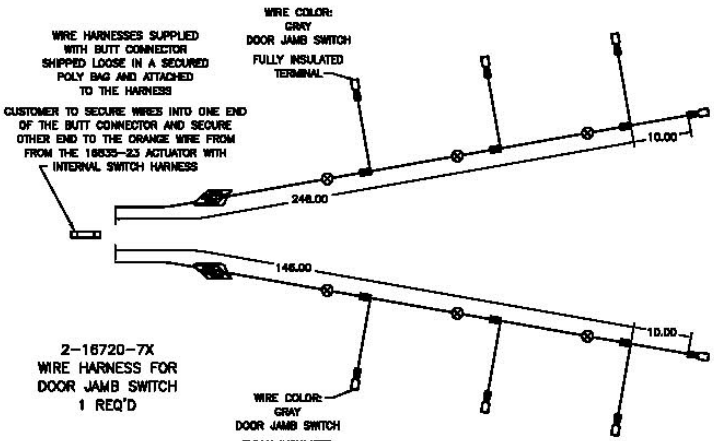

2-16720-7X
WIRE HARNESS FOR DOOR JAMB SWITCH
1 REQ'D

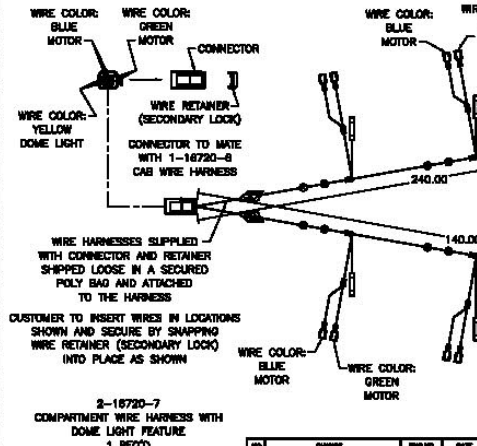

2-16720-7
COMPARTMENT WIRE HARNESS WITH DOME LIGHT FEATURE
1 REQ'D

NO	CHANGE	ENGR.	DATE
	REVISED PER TRACKER	DS ENGR	1-10-07

UNCONTROLLED COPY

SUPERSEDES DRAWING ALM-16835-U DATED 12-12-06.

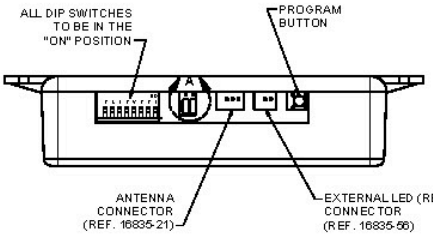

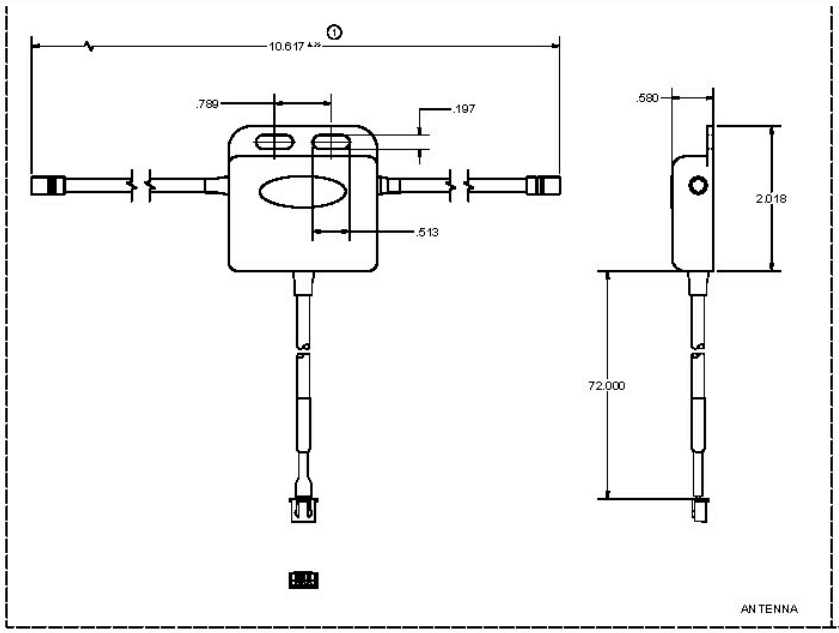

BUTT
(
BUT

PROGRAMMING THE
MAKE SURE THE SY
THE ACTUATOR WIT
CONTROL MODULE

TO PROGRAM THE C
(TRANSMITTERS), P
MODULE (3) TIMES,
ON ALL OF THE KEY
VEHICLE, (UP TO 4 K
LIGHTING UP. THEN
SWITCH WIRE HARN
KEY FOB BY LOCKIN
PROPER OPERATIO
AT THE SAME TIME
KEY FOB AT A TIME

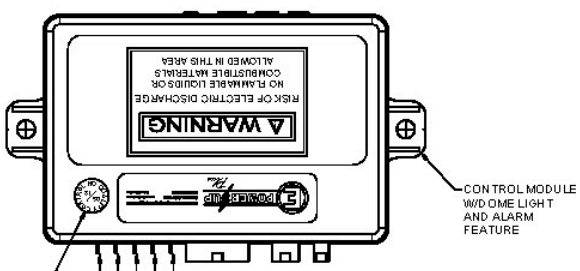

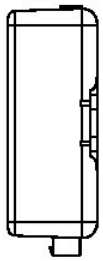

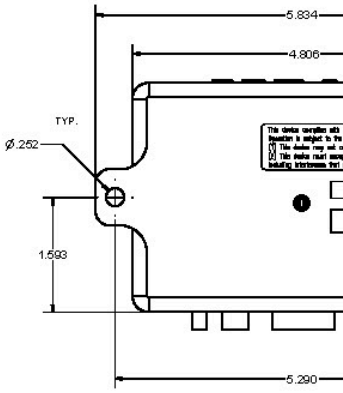

KER WITH DATE CODE
ED UPON SUCCESSFUL
MPLETION OF TESTING
CKER COLOR: YELLOW

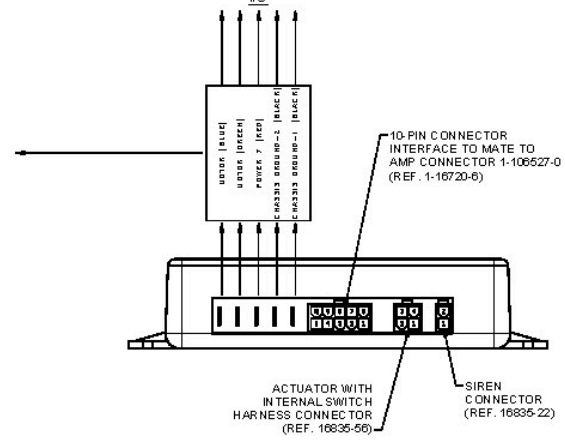

SEE KEY FOB PROGRAMMING NOTES

FEATURES:

1. CONTROL MODULE CAN HOLD UP TO (4) KEY FOBS (TRANSMITTERS) WITH DIFFERENT SIGNALS.
2. CONTROL MODULE INCORPORATES A LOCK PULSE TIMER THAT PROVIDES A .4 SECOND PULSE FROM THE CONTROL MODULE TO THE ACTUATORS. IF THE BUTTONS ON THE KEY FOB (TRANSMITTER) ARE HELD DOWN FOR AN EXTENDED PERIOD, THE LOCK PULSE TIMER WILL PREVENT THE ACTUATORS FROM BEING DAMAGED.
3. CONTROL MODULE INCORPORATES A TIME-OUT FEATURE THAT ELIMINATES DAMAGE TO THE ACTUATORS BY SHUTTING DOWN THE SYSTEM FOR 30 SECONDS IF THE BUTTONS ON THE KEY FOB (TRANSMITTER) ARE ACTIVATED MORE THEN 8 TIMES IN A 30 SECOND PERIOD. AFTER THE 30 SECOND TIME-OUT PERIOD, THE SYSTEM WILL FUNCTION AS NORMAL.
4. CONTROL MODULE INCORPORATES A FEATURE TO ACTIVATE/DEACTIVATE DOME LIGHTS. WHEN BUTTON #2 (UNLOCK) IS ACTIVATED, THE DOME LIGHTS WILL BE ACTIVATED FOR 10 MINUTES. WHEN BUTTON #1 (LOCK) IS ACTIVATED, THE DOME LIGHTS WILL BE TURNED OFF. OPTIONALLY, WHEN BUTTON #1 (LOCK) AND BUTTON #3 (N/A) ARE PRESSED AT THE SAME TIME, THE DOME LIGHTS WILL BE ACTIVATED FOR 10 MINUTES. BY PRESSING BUTTON #1 (LOCK) AND BUTTON #4 (N/A) AT THE SAME TIME, THE DOME LIGHTS WILL BE TURNED OFF.
5. KEY FOB (TRANSMITTER) HAS A RANGE OF 150 FEET MAXIMUM.
6. OPERATING FREQUENCY: 433.92 MHz.
7. ALL COMPONENTS TO BE SHIPPED LOOSE IN A SECURED POLY BAG.

UNCONTROLLED COPY

SUPERSEDES DRAWING 16835-50PKSHEET 1 OF 2 DATED 5-14-09.

REVISION HISTORY			
REV	DESCRIPTION	EN	DATE
	CONVERTED TO 3D	5597	3-29-13
1	10.62 +/-.25 was 10.58	5672	9-19-14

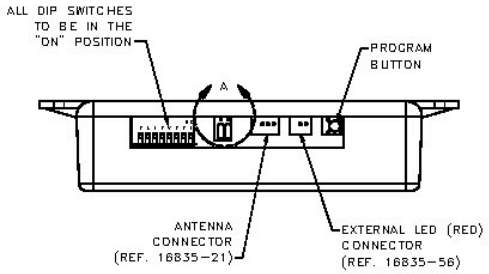

FEATURES:
1. CONTROL MODULE CAN HOLD UP TO (4) KEY FOBS (TRANSMITTERS) WITH DIFFERENT SIGNA SEE 16835-15 KEY FOB DRAWING FOR PROGRAMMING PROCEDURE.
2. CONTROL MODULE INCORPORATES A LOCK PULSE TIMER THAT PROVIDES A .4 SECOND PULS THE CONTROL MODULE TO THE ACTUATORS. IF THE BUTTONS ON THE KEY FOB (TRANSMI HELD DOWN FOR AN EXTENDED PERIOD, THE LOCK PULSE TIMER WILL PREVENT THE ACTUA FROM BEING DAMAGED.
3. CONTROL MODULE INCORPORATES A TIME-OUT FEATURE THAT ELIMINATES DAMAGE TO THE A BY SHUTTING DOWN THE SYSTEM FOR 30 SECONDS IF THE BUTTONS ON THE KEY FOB (T ARE ACTIVATED MORE THEN 8 TIMES IN A 30 SECOND PERIOD. AFTER THE 30 SECOND T PERIOD, THE SYSTEM WILL FUNCTION AS NORMAL.
4. CONTROL MODULE INCORPORATES A FEATURE TO ACTIVATE/DEACTIVATE DOME LIGHTS. WHEN BUTTON #2 (UNLOCK) IS ACTIVATED, THE DOME LIGHTS WILL BE ACTIVATED FOR 10 MINUT WHEN BUTTON #1 (LOCK) IS ACTIVATED, THE DOME LIGHTS WILL BE TURNED OFF. OPTION WHEN BUTTON #1 (LOCK) AND BUTTON #3 (N/A) ARE PRESSED AT THE SAME TIME, THE DOME LIGHTS WILL BE ACTIVATED FOR 10 MINUTES. BY PRESSING BUTTON #1 (LOCK) AN BUTTON #4 (N/A) AT THE SAME TIME, THE DOME LIGHTS WILL BE TURNED OFF.
5. KEY FOB (TRANSMITTER) HAS A RANGE OF 150 FEET MAXIMUM.
6. OPERATING FREQUENCY: 433.92 MHz.
7. SHIPPED IN A SECURED POLY BAG.

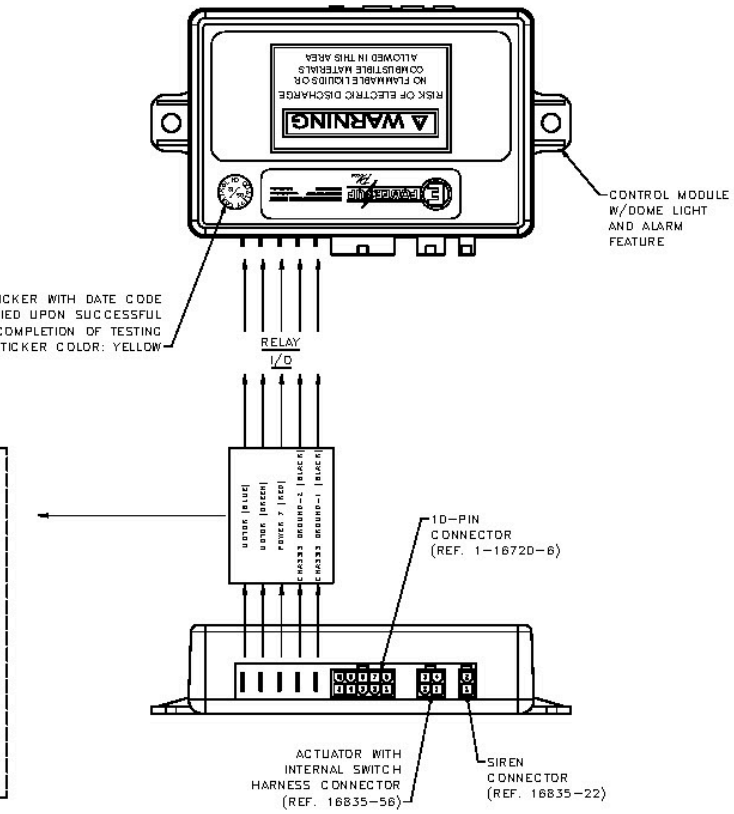

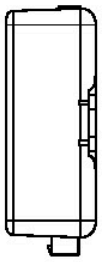

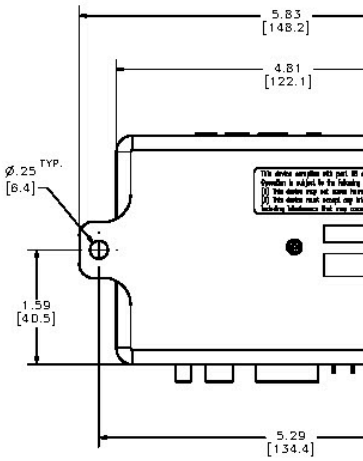

UNCONTROLLED COPY

cifications and engineering information disclosed hereon are the property of Eberhard Manufacturing Company and are not to be disseminated or reproduced without express written consent. f the matter disclosed hereon. In accepting loan of this drawing, recipient agrees to keep it and the matter disclosed hereon in confidence and not to use nor permit their use in any way ern Company. 21944 Drake Road, Cleveland, Ohio 44149-9712 © 2014 EBERHARD MFG. CO.

REV	
	REVISED, REDRAWN A
1	10.62 +/- .25 was 10.58

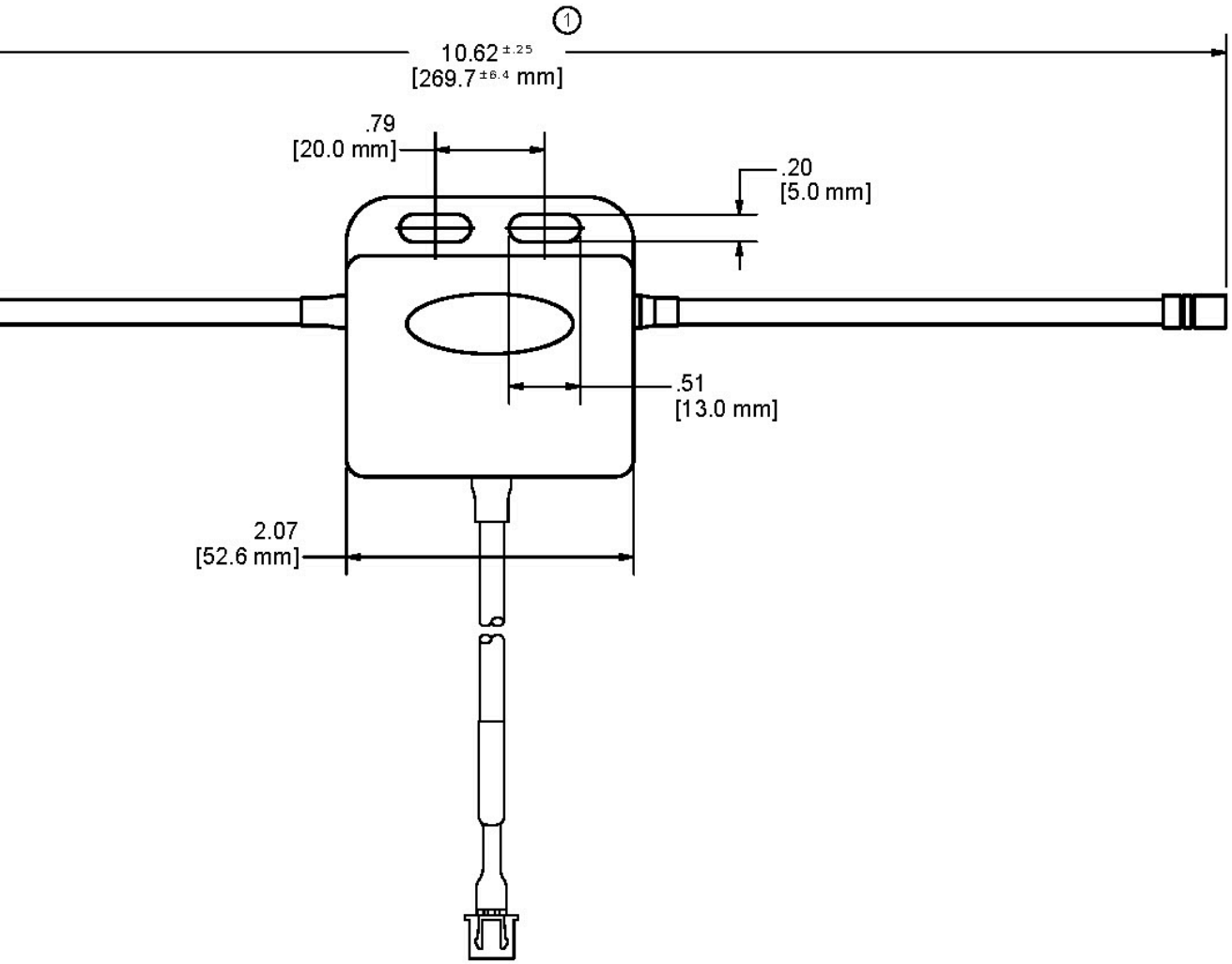

.58
[14.7 mm]

72.00 ±.99
[1828.8 ±25.1 mm]

TERFACE
ODULE.
RAPPED IN
THAN 10
A

UNCONTROLLED COPY

SUPERSEDES DRAWING 16835-21 SHEET 1 OF 2 DATED 12-9-05.

THIS DOCUMENT IS IN ACCORDANCE WITH ASME Y14.15-2009

LINEAR MEASURE: INCH

UNLESS OTHERWISE SPECIFIED TOLERANCES ARE AS FOLLOWS:

	IN	MM
ANGLES:	±2'	±2'
2 PLACE DEC.:	±.03	±.76
3 PLACE DEC.:	±.015	±.38
ALL HOLES:	±.005	±.13

DATE 3/29/2013
DR.BY FLP
SCALE FULL
CHK.BY

NAME

MATERIAL

cifications and engineering information disclosed hereon are the property of Eberhard Manufacturing Company and are not to be disseminated or reproduced without express written consent. f the matter disclosed hereon. In accepting loan of this drawing, recipient agrees to keep it and the matter disclosed hereon in confidence and not to use nor permit their use in any way em Company, 21944 Drake Road, Cleveland, Ohio 44149-9712 © 2015 EBERHARD MFG. CO.

REVISIO	
REV	DESCRIPTION
	CONVERTED TO 3D

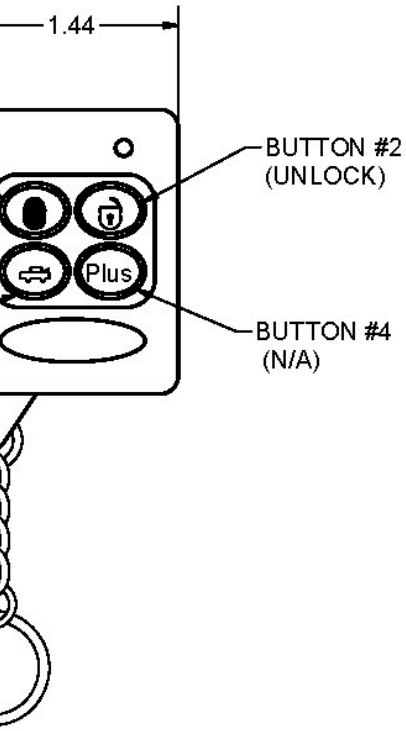

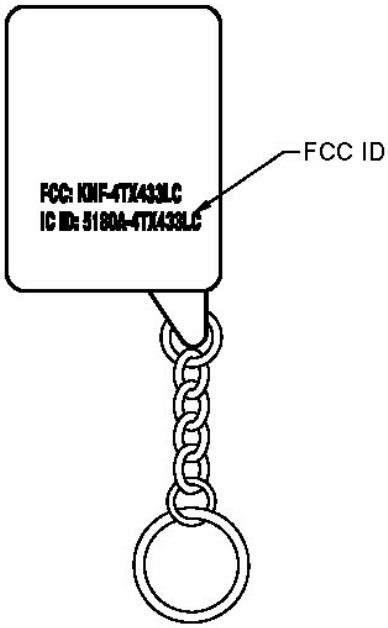

FOBS:
IS UNLOCKED AND THEN DISCONNECT THE ACTUATOR WITH INTERNAL
FROM THE CONTROL MODULE PRIOR TO PROGRAMMING.

ROL MODULE TO ADDITIONAL KEY FOB (TRANSMITTERS), PRESS THE
ONTROL MODULE (3) TIMES, LED WILL LIGHT UP, THEN PRESS
E KEY FOBS THAT WILL BE ASSOCIATED WITH THE VEHICLE,
HIN 10 SECONDS OF THE LED LIGHTING UP. THEN RECONNECT
ERNAL SWITCH WIRE HARNESS TO THE CONTROL MODULE. TEST EACH
O UNLOCKING THE SYSTEM TO ENSURE PROPER OPERATION.
ST BE PROGRAMMED AT THE SAME TIME USING THIS PROCEDURE.
FOB AT A TIME WILL ERASE THE PREVIOUS PROGRAMMED KEY FOB.

CONTROL MODULE ONLY.
TH KEY FOB (TRANSMITTER).
RY: 23AP (12V ALKALINE) OR 23-279 (12V ALKALINE)

UNCONTROLLED COPY

SUPERSEDES DRAWING 16835-15 SHEET 1 OF 2 DATED 1-10-07.

THIS DOCUMENT IS IN ACCORDANCE WITH ASME Y14.15-2009

LINEAR MEASURE: INCH

UNLESS OTHERWISE SPECIFIED TOLERANCES ARE AS FOLLOWS:

	IN	MM
ANGLES:	±2'	±2'
2 PLACE DEC.:	±.03	±.76
3 PLACE DEC.:	±.015	±.38
ALL HOLES:	±.005	±.13

DATE 4/17/2015
DR.BY FLP
SCALE FULL
CHK'BY

NAME KEY F
MATERIAL

...the designs, specifications and engineering information disclosed hereon are the property of Eberhard Manufacturing Company and are not to be disseminated or reproduced without express written consent. ...construction of the matter disclosed hereon. In accepting loan of this drawing, recipient agrees to keep it and the matter disclosed hereon in confidence and not to use nor permit their use in any way ...ion of the Eberhard Company. 27044 Bolte Road, Cleveland, Ohio 44140-3312 © 2005 EBERHARD MFG. CO.

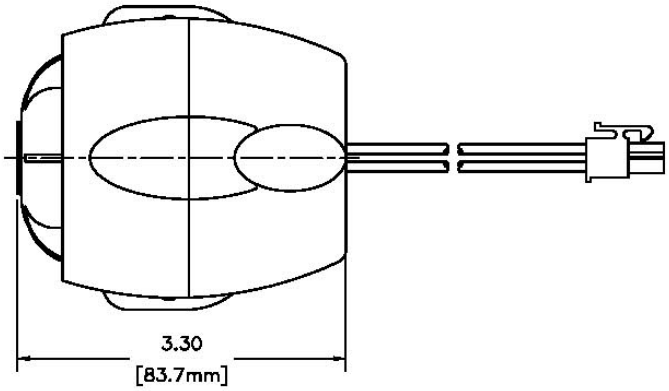

NOTES:
1) SIREN DECIBELS: 117 ±3 db.
2) SIREN FUNCTION: THE SIREN
30 SECONDS EACH WITH (6)
AUDIBLE TONES.
3) SIREN TO BE 100% CHECKED
② 4) SIREN TO BE SHIPPED IN A S

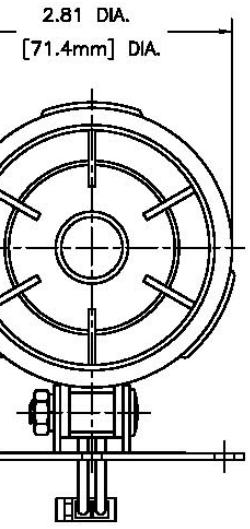

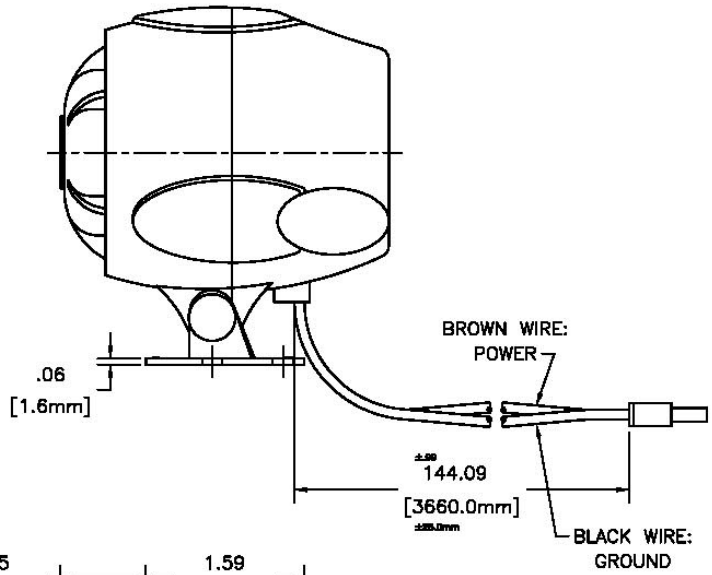

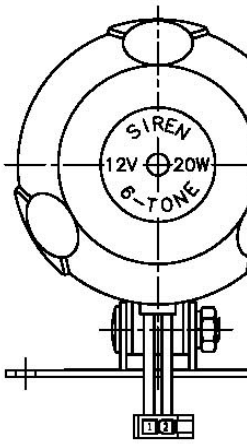

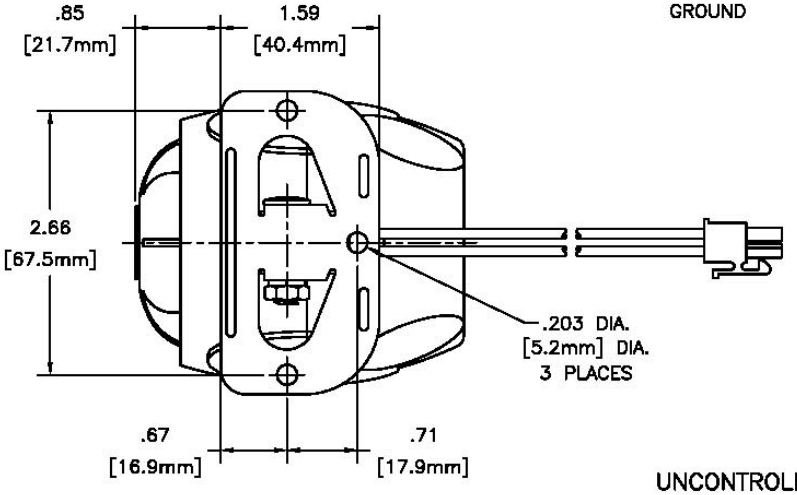

NOTE:
SIREN CONNECTOR TO IN
WITH 16835-4 CONTROL

UNCONTROLLED COPY

UNLESS OTHERWISE SPECIFIED TOLERANCES ARE AS FOLLOWS:	
ANGLES:	±2°
2 PLACE DEC.:	±.03
3 PLACE DEC.:	±.015
ALL HOLES:	±.005

DATE	12-12-05
DRAWN	BAA
SCALE	FULL
CHECKED	

REV	
	CONVERT
1	UPDATED
2	REVISED T
3	ADDED VIE
4	REMOVED

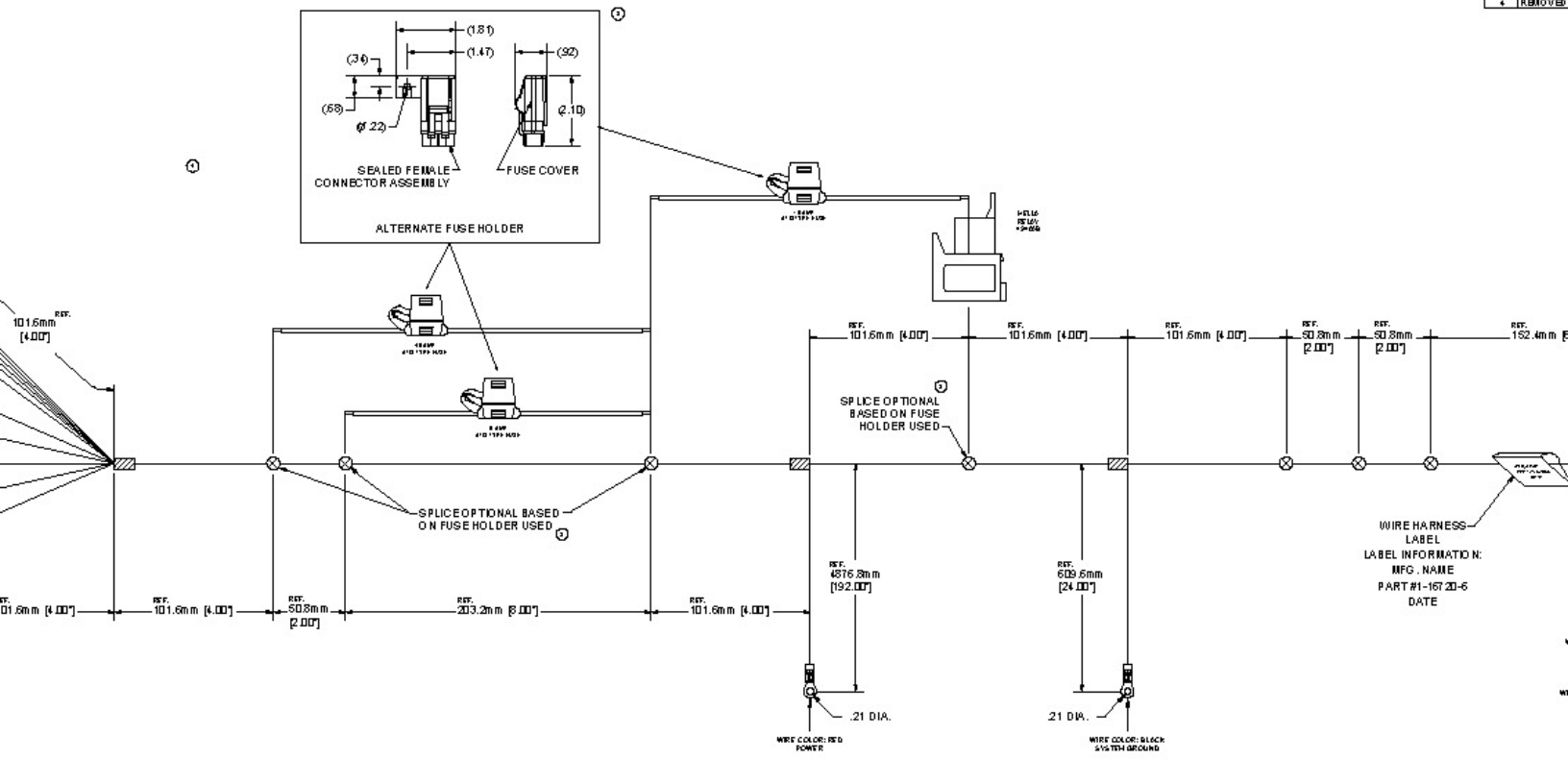

ALLATION PURPOSES
TROL MODULE)

-ANTENNA

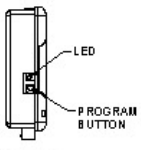

SIDE VIEW

IN
R

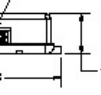

END VIEW

1.165

BOTTOM SIDE OF CASE

POSITIVE POLARITY SETTING VIEW A

BOTTOM SIDE OF CASE

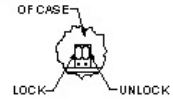

NEGATIVE POLARITY SETTING VIEW A

JUMPER SETTINGS FOR POSITIVE OR NEGATIVE POLARITY SYSTEMS. STANDARD CONTROL MODULE IS SET TO POSITIVE POLARITY SETTING.

INFORMATION FOR INSTALLATION PURPOSES
(16835-5DPK CONTROL MODULE)

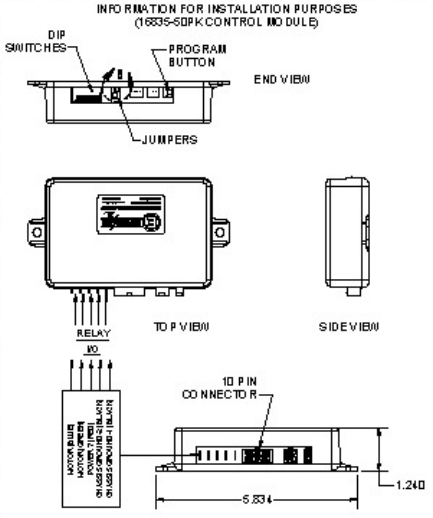

BOTTOM SIDE OF CASE

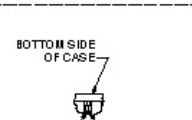

POSITIVE POLARITY SETTING VIEW B

BOTTOM SIDE OF CASE

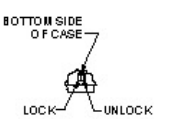

NEGATIVE POLARITY SETTING VIEW B

JUMPER SETTINGS FOR POSITIVE OR NEGATIVE POLARITY SYSTEMS. STANDARD CONTROL MODULE IS SET TO POSITIVE POLARITY SETTING.

NOTES:
1. DIMENSIONS ARE MEASURED FROM BAC
TO CENTER OF BREAKOUTS OR SPLICES.
2. HARNESS IS COIL-WRAPPED IN DIAMETE
THAN 10 INCHES AND SHIPPED IN A SEAL
3. HARNESS IS 100% CONTINUITY CHECKED

UNCONTROLLE

METRIC

DIMENSIONS ARE IN MI	
DIMENSION	TO
ALL DIMENSIONS	±

DIMENSIONS SHOWN IN [] A

SUPERSEDES DRAWING 1-16720-6 SHEET 1 OF 2 DATED 1-17-05.

ER ACTUATOR:

BLUE POWER ACTUATOR WIRE
ED POWER ACTUATOR WIRE

RED POWER ACTUATOR WIRE
LUE POWER ACTUATOR WIRE

ES IN LOCATIONS
BY SNAPPING
NDARY LOCK)
SHOWN
ECTOR

WIRE RETAINER
(SECONDARY LOCK)

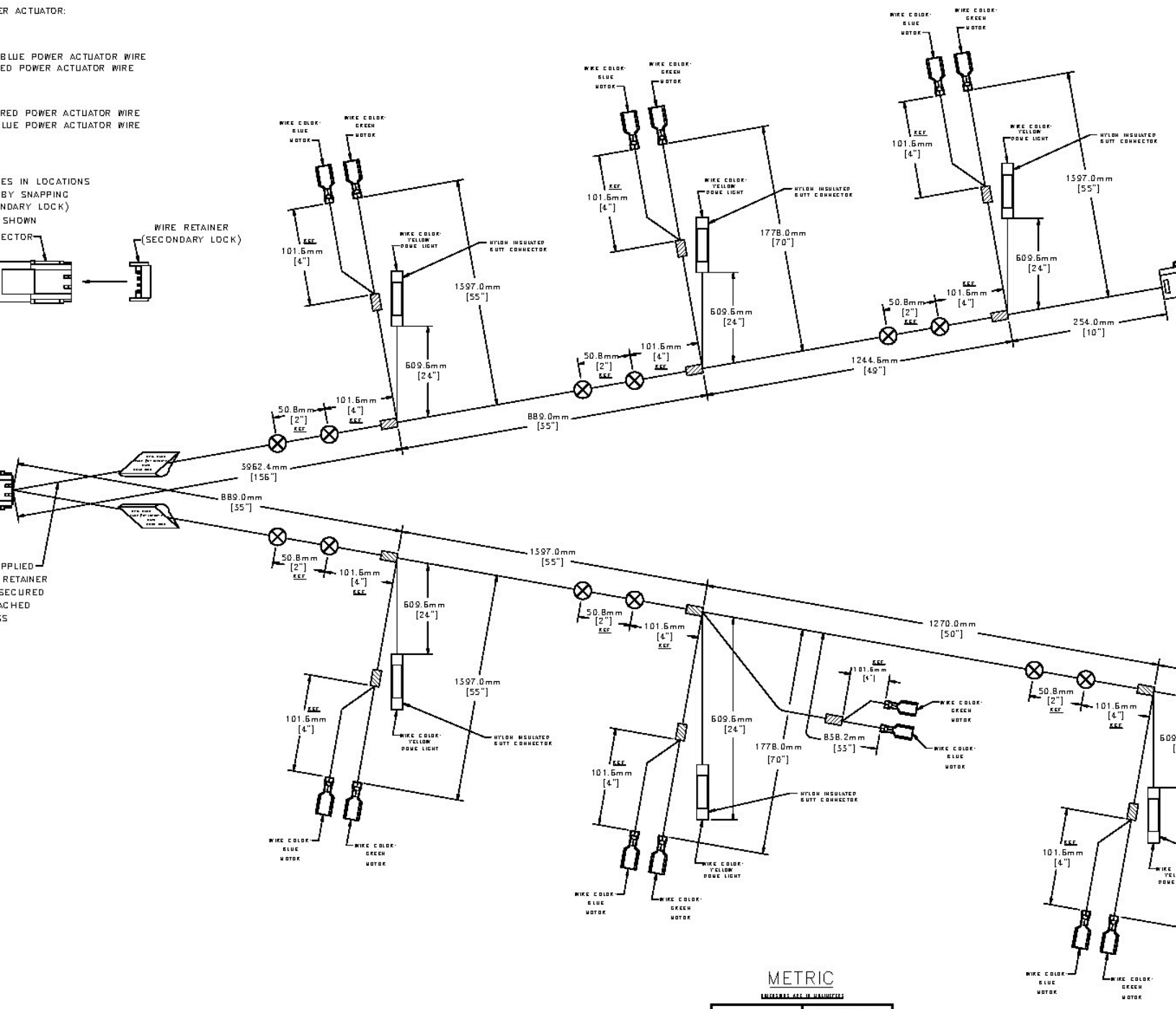

PPLIED
RETAINER
SECURED
ACHED
S

CTORS,
HE END OF TERMINALS.
METER NO LARGER
BAG.

METRIC

DIMENSIONS ARE IN MILLIMETERS

DIMENSION	TOLERANCE (UNLESS OTHERWISE SPECIFIED)
ALL DIMENSIONS	±25.0 mm [±.99"]

DIMENSIONS SHOWN IN [ ] ARE IN INCHES

UNCONTROLLED COPY

SUPERSEDES DRAWING 2-167207 SHEET 1 OF 2 DATED 12-7-05.

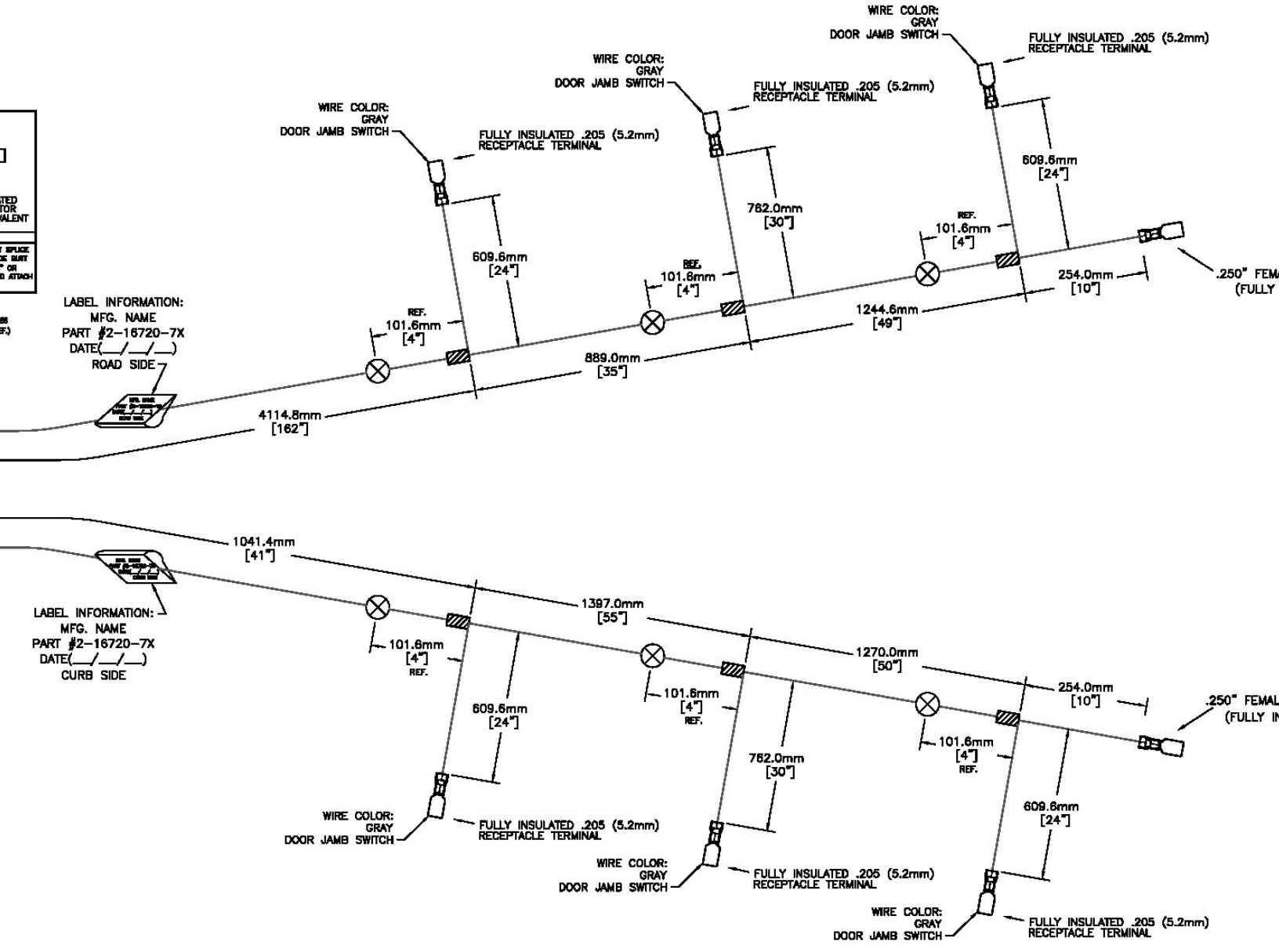

OF CONNECTORS,
ND TO THE END OF TERMINALS.
ED IN DIAMETER NO LARGER
ED POLY BAG.
ED.
TER PANEL HOLE.

METRIC

DIMENSIONS ARE IN MILLIMETERS

DIMENSION	TOLERANCE (UNLESS OTHERWISE SPECIFIED)
ALL DIMENSIONS	±25.0 mm [±.99"]

DIMENSIONS SHOWN IN [ ] ARE IN INCHES

NO.	CHANGE	ENGR.	DATE

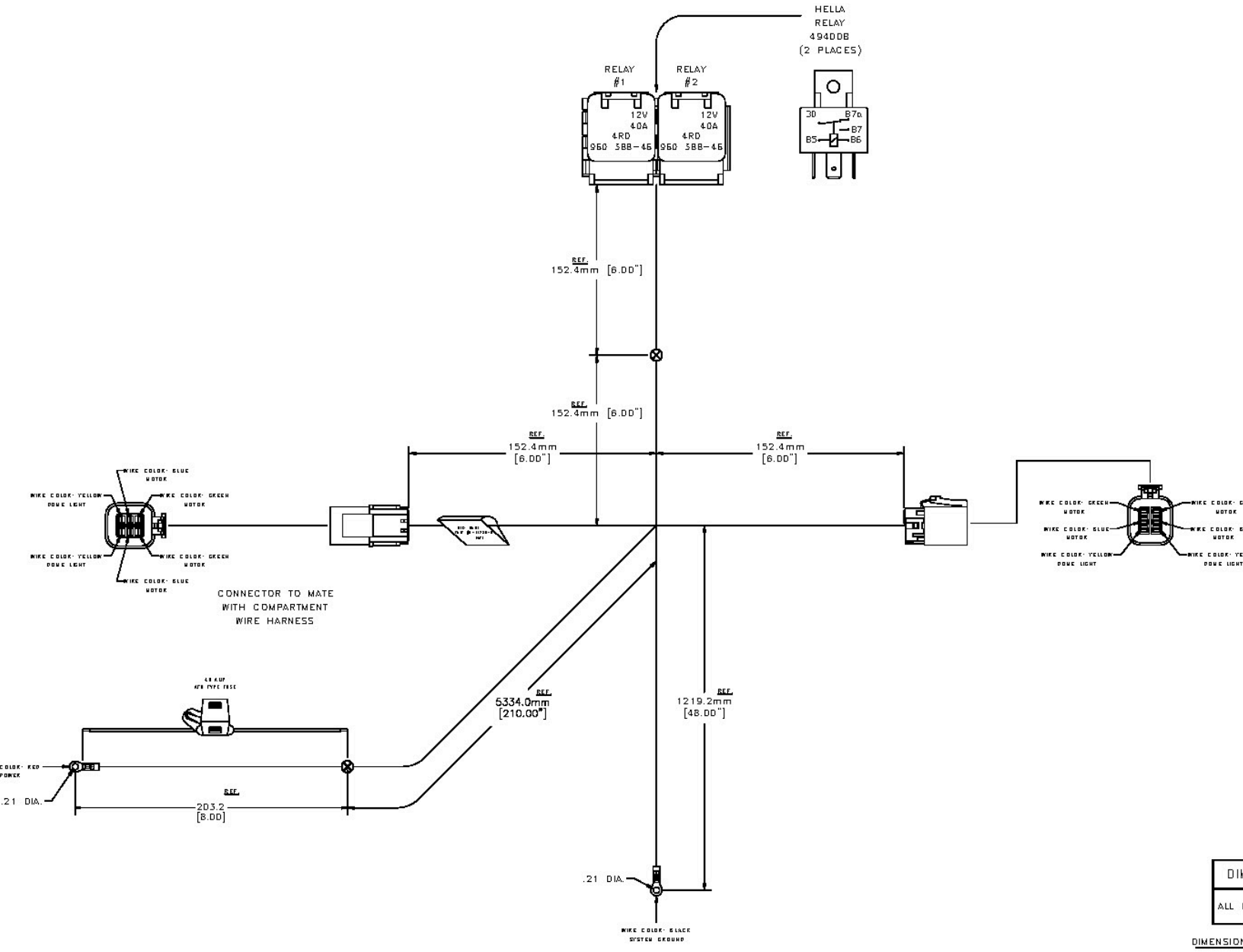

NECTOR

LARGER
BAG.

UNCONTROLLED COPY

SUPERSEDES DRAWING 2-16720-8 SHEET 1 OF 2 DATED 12-7-05.

...ns Manufacturing Company are shown to be dimensions or responses without express written consent.
...which is the manufacturer's dissemination or confidence shall not be used or permitted under any way.
...ARD, INC. CO.

3 2

...WER ACTUATOR:

...D BLUE POWER ACTUATOR WIRE
... RED POWER ACTUATOR WIRE

...D RED POWER ACTUATOR WIRE
... BLUE POWER ACTUATOR WIRE

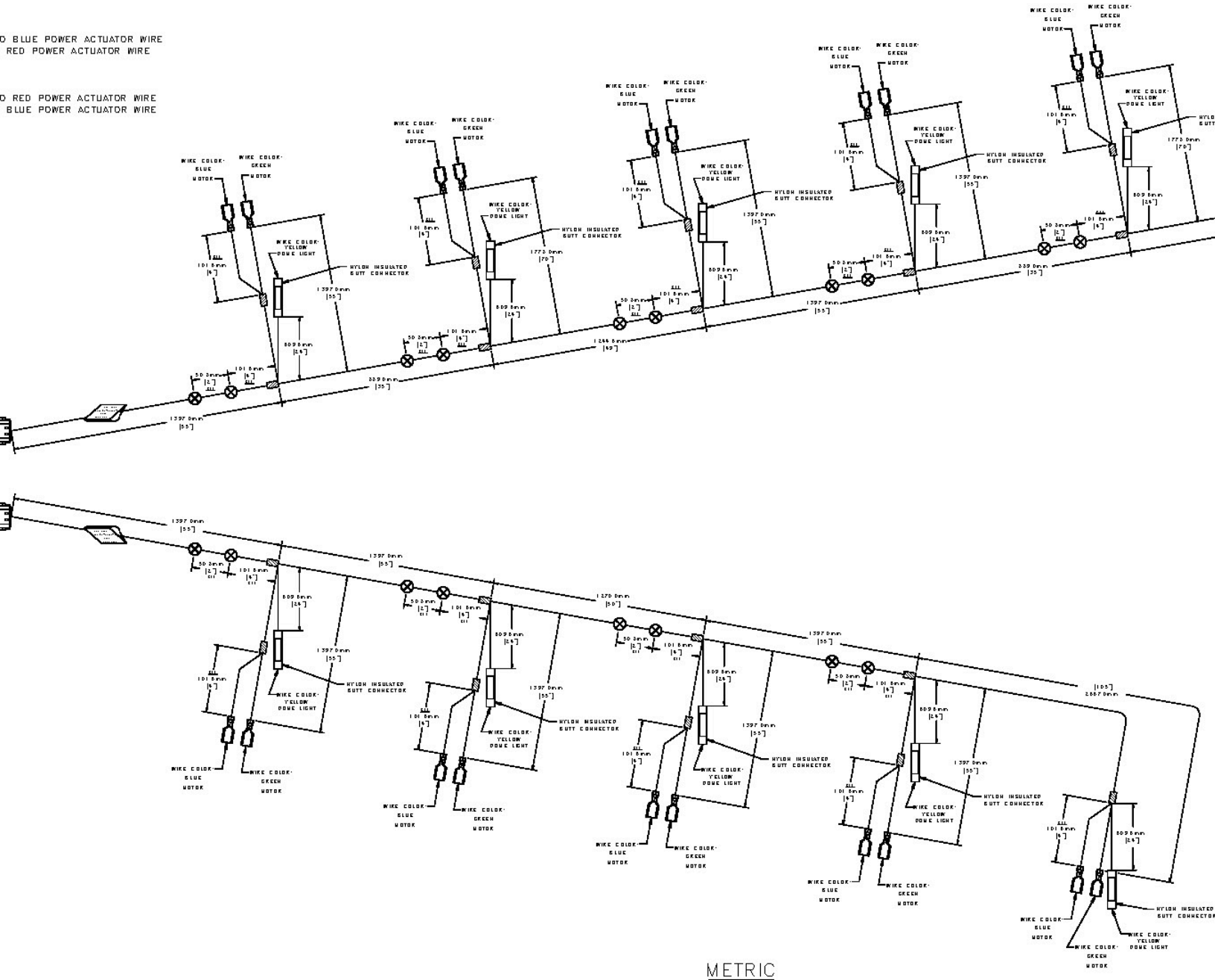

...NECTORS,
...D THE END OF TERMINALS.
...DIAMETER NO LARGER
...LY BAG.

UNCONTROLLED COPY

METRIC

DIMENSIONS ARE IN MILLIMETERS

DIMENSION	TOLERANCE (UNLESS OTHERWISE SPECIFIED)
ALL DIMENSIONS	±25.0 mm [±.99"]

DIMENSIONS SHOWN IN [ ] ARE IN INCHES

SUPERSEDES DRAWING 2-167 20-9 SHEET 1 OF 2 DATED 12-7-05.

3 2

CTUATOR:

POWER ACTUATOR WIRE
OWER ACTUATOR WIRE

POWER ACTUATOR WIRE
POWER ACTUATOR WIRE

ECTOR TO MATE
IENT WIRE HARNESS

ONNECTORS
ACE WITH
2-16720-7

F CONNECTORS,
AND TO THE END OF TERMINALS.
ED IN DIAMETER NO LARGER
ED POLY BAG.
ED.

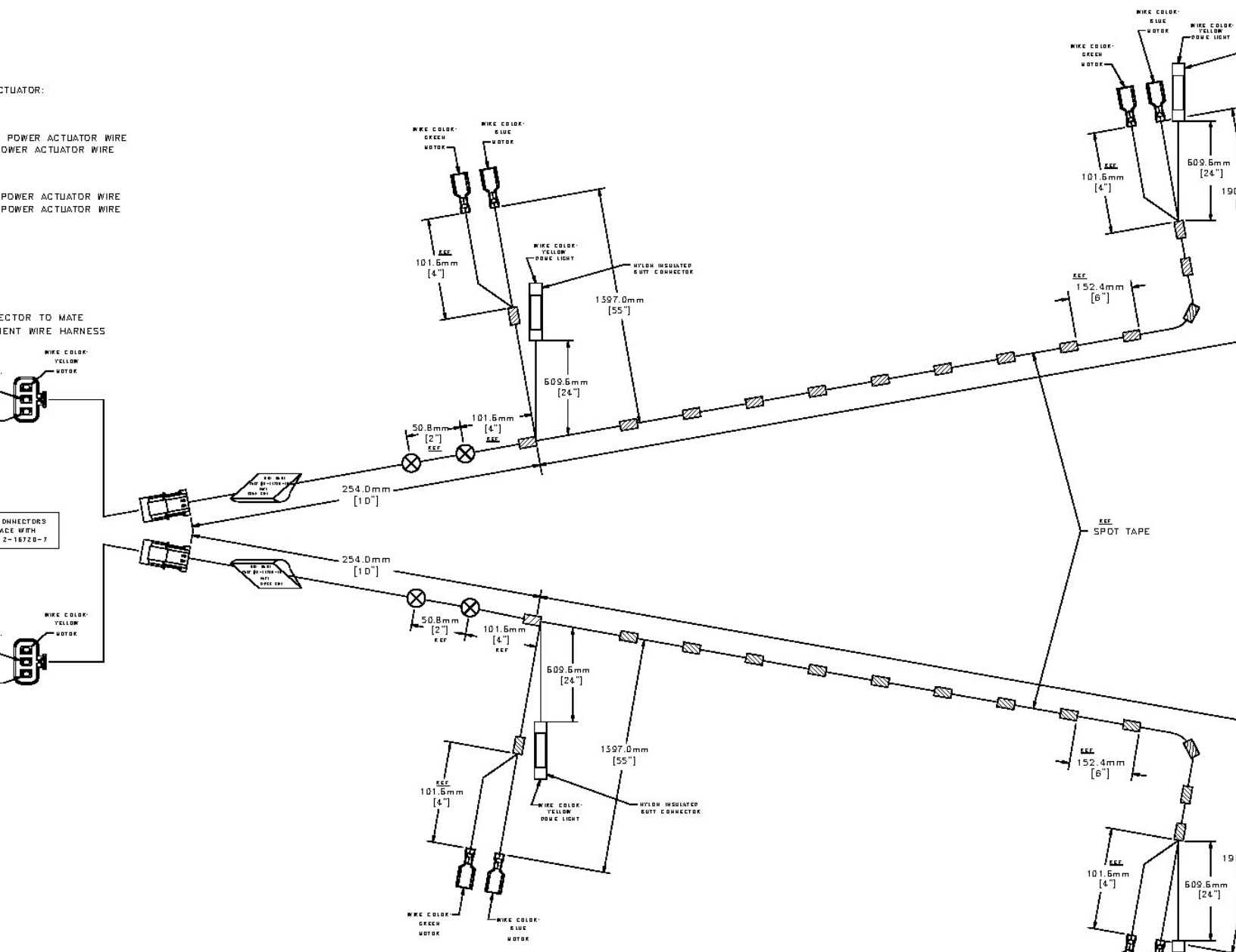

METRIC

DIMENSIONS ARE IN MILLIMETERS

DIMENSION	TOLERANCE (UNLESS OTHERWISE SPECIFIED)
ALL DIMENSIONS	±25.0 mm [±.99"]

DIMENSIONS SHOWN IN [ ] ARE IN INCHES

UNCONTROLLED COPY

SUPERSEDES DRAWING 2-16720-10 SHEET 1 OF 2 DATED 9-22-05.

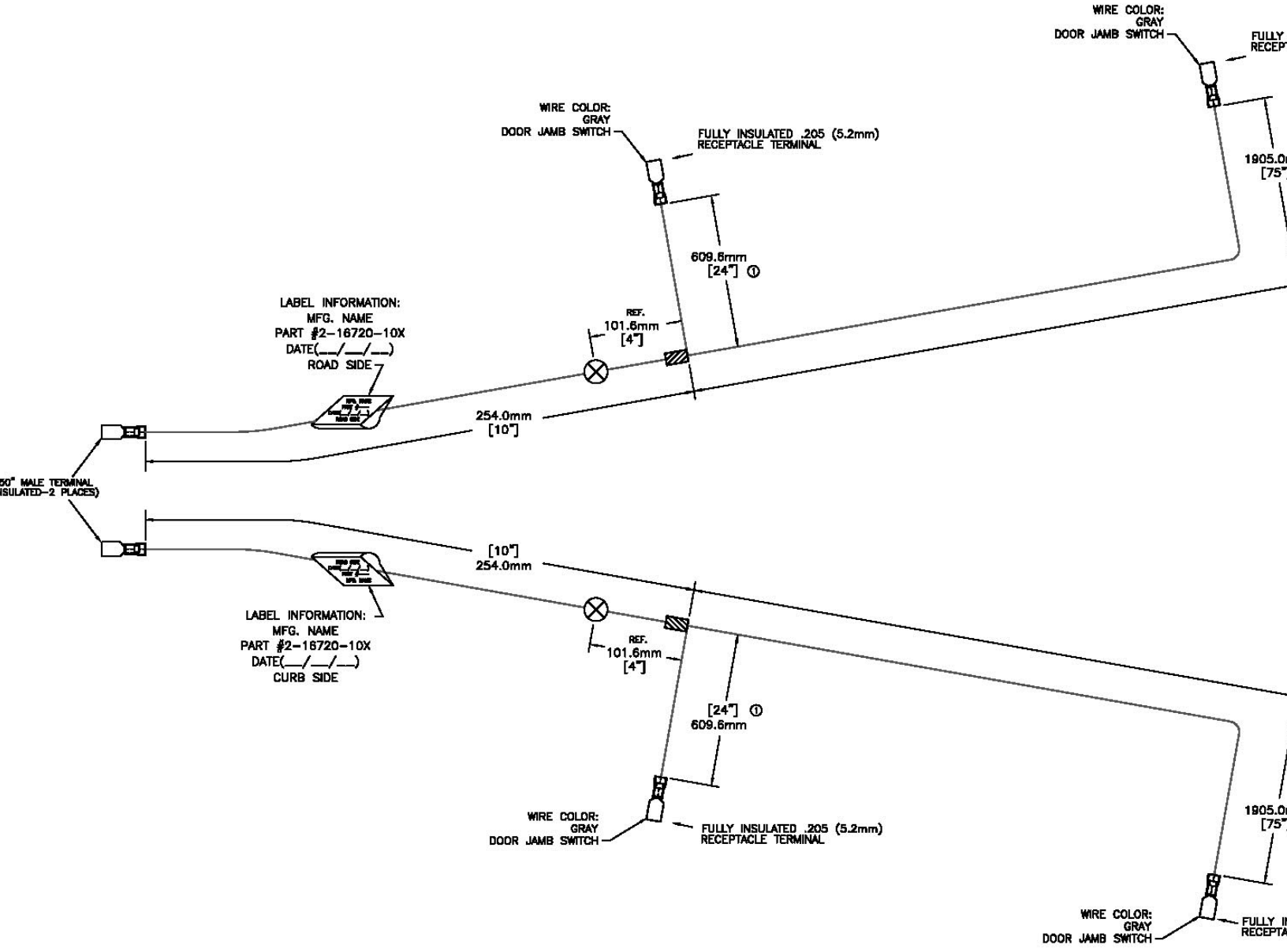

OM BACK OF CONNECTORS,
SPLICES, AND TO THE END OF TERMINALS.
COIL-WRAPPED IN DIAMETER NO LARGER
IN A SEALED POLY BAG.
ITY CHECKED.
.50" DIAMETER PANEL HOLE.

METRIC

DIMENSIONS ARE IN MILLIMETERS

DIMENSION	TOLERANCE (UNLESS OTHERWISE SPECIFIED)
ALL DIMENSIONS	±25.0 mm [±.99"]

DIMENSIONS SHOWN IN [ ] ARE IN INCHES

UNCONTROLLED

NO.	CHANGE	ENGR.	DATE

ifications and engineering information disclosed hereon are the property of Eberhard Manufacturing Company and are not to be disseminated or reproduced without express written consent. the matter disclosed hereon. In accepting loan of this drawing, recipient agrees to keep it and the matter disclosed hereon in confidence and not to use nor permit their use in any way rn Company. 21944 Drake Road, Cleveland, Ohio 44149-9712 © 2013 EBERHARD MFG. CO.

REV	
	REVISED, REDRAN AN

ACTUATOR WITH
SWITCH HARNESS
CE WITH 16835-4
MODULE.

ACTUATOR WITH
INTERNAL SWITCH
HARNESS

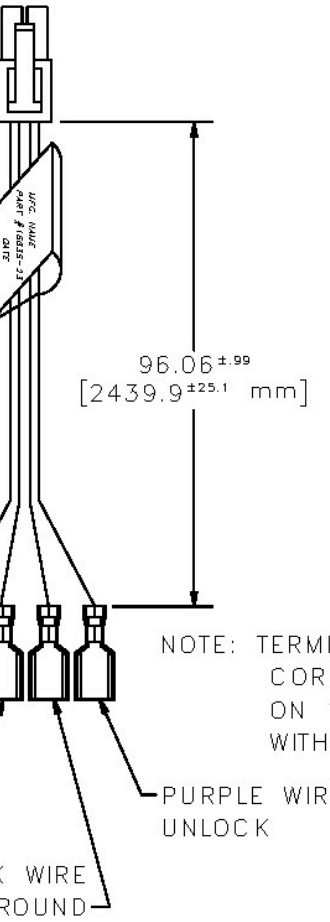

NOTE: TERMINALS TO INTERFACE WITH
CORRESPONDING WIRE COLORS
ON 16835-1 POWER ACTUATOR
WITH INTERNAL SWITCH.

PURPLE WIRE
UNLOCK

K WIRE
ROUND

OIL-WRAPPED SEPARATELY IN DIAMETERS
INCHES.
GASKET TO BE PLACED IN SEALED POLY BAG.
HARNESSES AND RETAINER CLIP/GASKET
ACED TOGETHER IN A SEALED POLY BAG.
% CONTINUITY CHECKED.

LED HARNESS

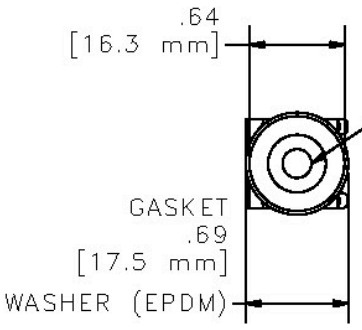

NOTES:
1. LED HOUSING –
PASSIVATED, FC
2. RECOMMENDED H
PANEL TO BE .9
3. 16835-56 LED H
WITH 16835-4

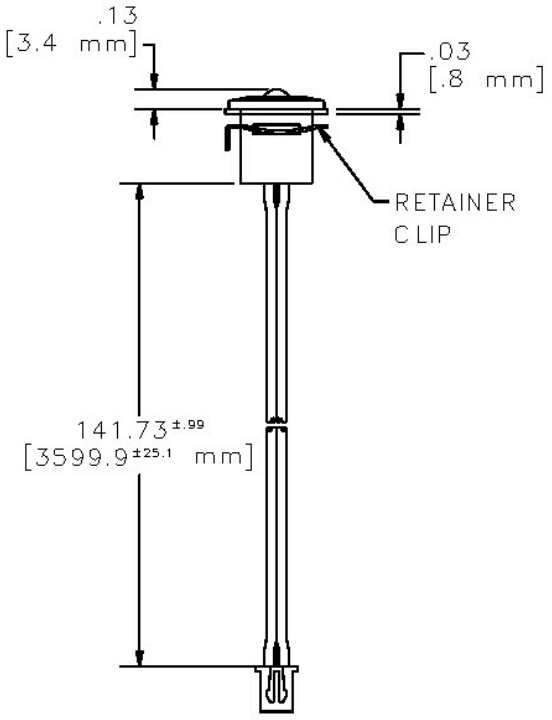

UNCONTROLLED COPY

SUPERSEDES DRAWING 16835-56 SHEET 1 OF 2 DATED 12-9-05

THIS DOCUMENT IS IN ACCORDANCE WITH ASME Y14.15-2009				
LINEAR MEASURE: INCH			DATE	NAME
UNLESS OTHERWISE SPECIFIED TOLERANCES ARE AS FOLLOWS:	IN	MM	3/29/2013	ACT
			DR.BY FLP	
ANGLES:	±2'	±2'	SCALE NONE	MATERIAL
2 PLACE DEC.:	±.03	±.76		
3 PLACE DEC.:	±.015	±.38	CHK.BY	
ALL HOLES:	±.005	±.13		

ifications and engineering information disclosed hereon are the property of Eberhard Manufacturing Company and are not to be disseminated or reproduced without express written consent. the matter disclosed hereon. In accepting loan of this drawing, recipient agrees to keep it and the matter disclosed hereon in confidence and not to use nor permit their use in any way
n Company, 21944 Drake Road, Cleveland, Ohio 44149-9712 © 2013 EBERHARD MFG. CO.

REV	
	REVISED, REDRAWN AI

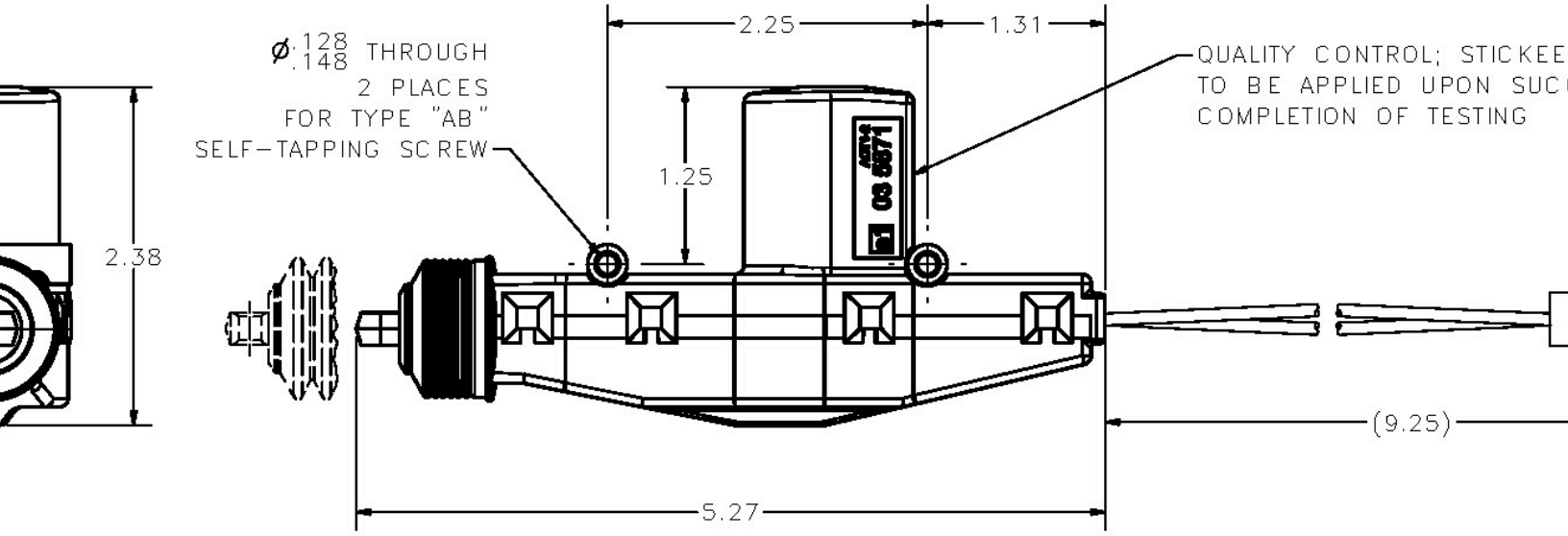

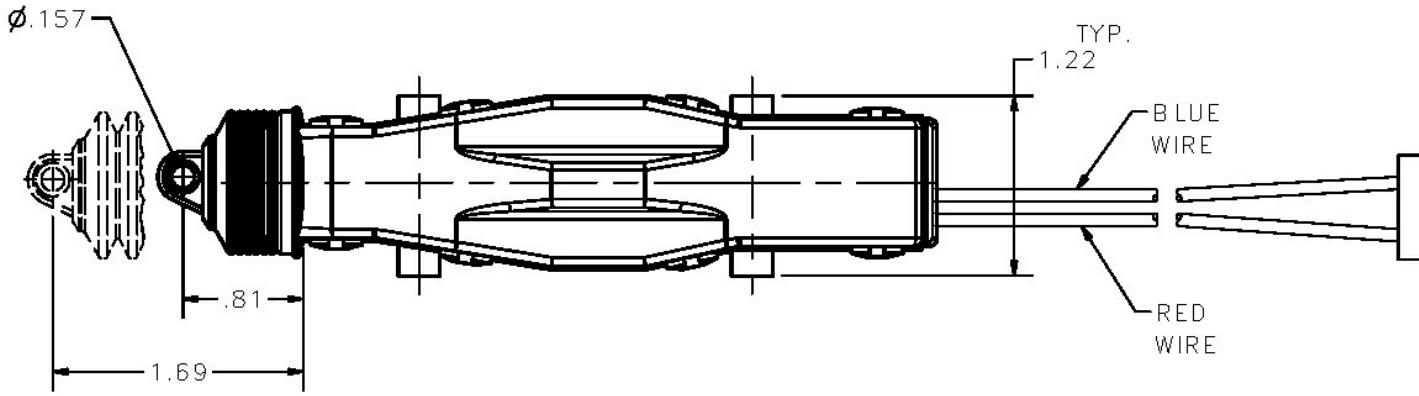

UNCONTROLLED COPY

3 VDC TO 13.7 VDC
: 4.5 A (MAX.)
−18.4° F TO +188.6° F

SUPERSEDES DRAWING 16720-1 SHEET 1 OF 2 DATED 3-14-03.

THIS DOCUMENT IS IN ACCORDANCE WITH ASME Y14.15-2009				
LINEAR MEASURE: INCH			DATE 3/29/2013	NAME
UNLESS OTHERWISE SPECIFIED TOLERANCES ARE AS FOLLOWS:			DR.BY FLP	
	IN	MM	SCALE FULL	MATERIAL
ANGLES:	±2°	±2°		
2 PLACE DEC.:	±.03	±.76		
3 PLACE DEC.:	±.015	±.38	CHK.BY	
ALL HOLES:	±.005	±.13		

EBI

ecifications and engineering information disclosed hereon are the property of Eberhard Manufacturing Company and are not to be disseminated or reproduced without express written consent. of the matter disclosed hereon. In accepting loan of this drawing, recipient agrees to keep it and the matter disclosed hereon in confidence and not to use nor permit their use in any way stern Company. 21944 Drake Road, Cleveland, Ohio 44149-9712 © 2013 EBERHARD MFG. CO.

REV	
	REVISED, REDRAWN A

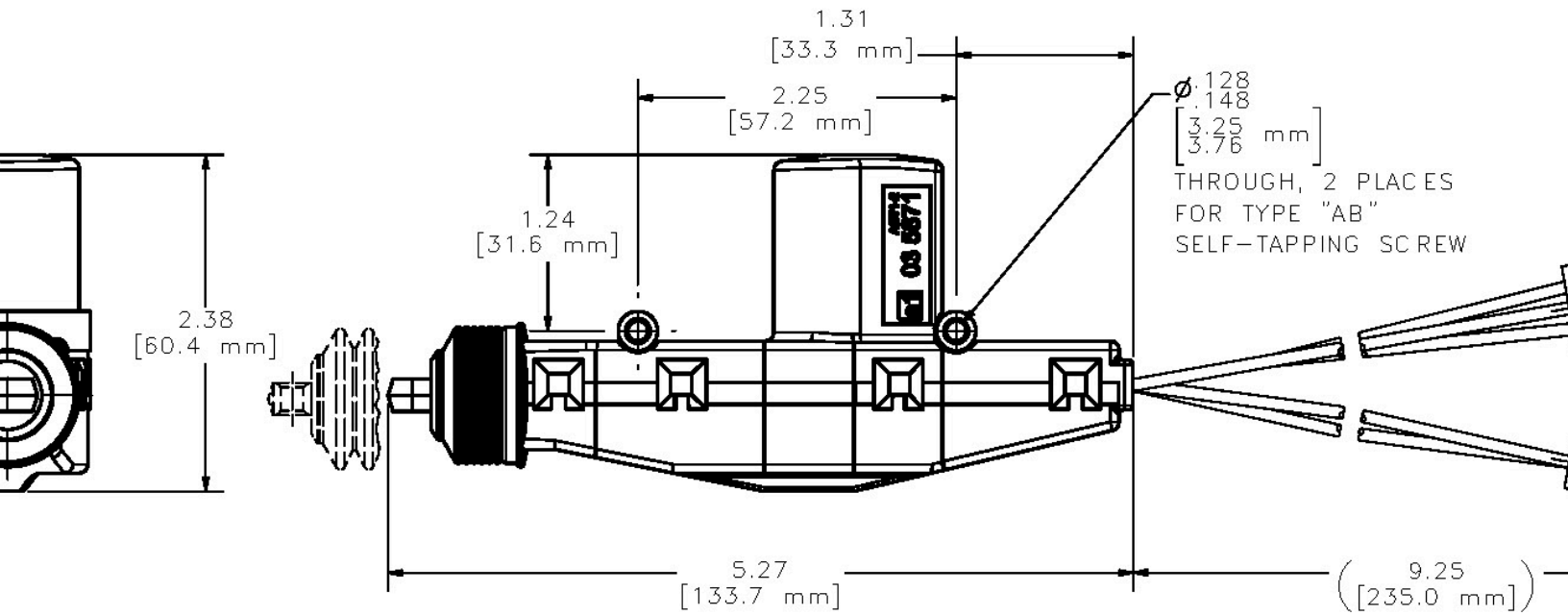

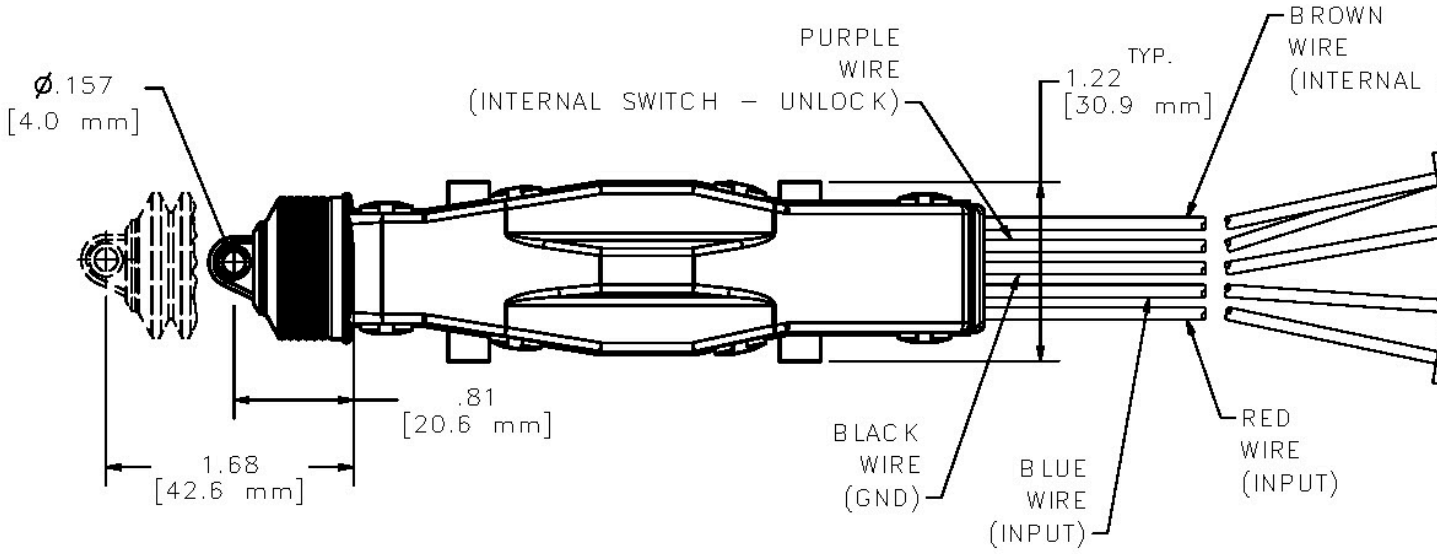

8.8 VDC TO 13.7 VDC
ION: 4.5 A (MAX.)
GE: –18.4° F TO +188.6° F

UNCONTROLLED COPY

SUPERSEDES DRAWING 16835-1 SHEET 1 OF 2 DATED 12-7-05.

THIS DOCUMENT IS IN ACCORDANCE WITH ASME Y14.15–2009				
LINEAR MEASURE: INCH			DATE	NAME
UNLESS OTHERWISE SPECIFIED TOLERANCES ARE AS FOLLOWS:			3/29/2013	P
	IN.	MM	DR.BY FLP	
ANGLES:	±2'	±2'	SCALE FULL	
2 PLACE DEC.:	±.03	±.76		MATERIAL
3 PLACE DEC.:	±.015	±.38	CHK.BY	— —
ALL HOLES:	±.005	±.13		

EB

...and the designs, specifications and engineering information disclosed hereon are the property of Eaton Manufacturing Company and are not to be disclosed or reproduced without express written consent. ...construction of the motor disclosed hereon. In accepting loan of this drawing, recipient agrees to keep it and the matter disclosed hereon in confidence and not to use nor permit their use in any way ...tion of the Eaton Company. 27044 Bolte Road, Cleveland, Ohio 44140-6713 © 2005 EATON MFG. CO.

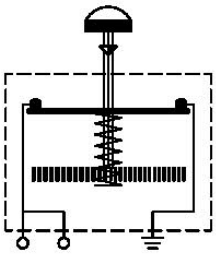

ELECTRICAL DIAGRAM

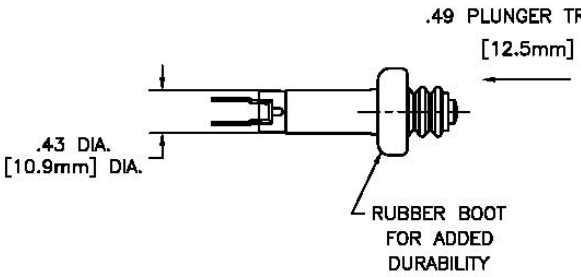

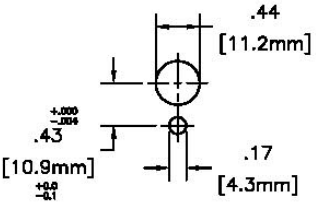

SUGGESTED OUTLINE
OF CUTOUT

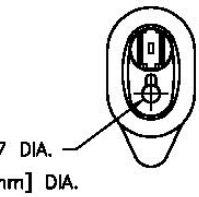

OUNDED
EW HOLE

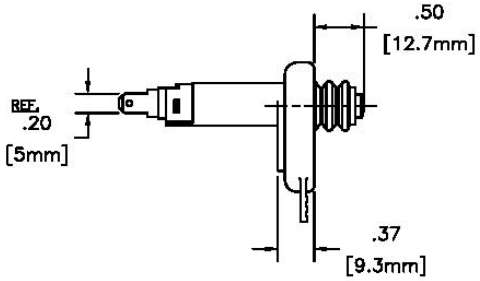

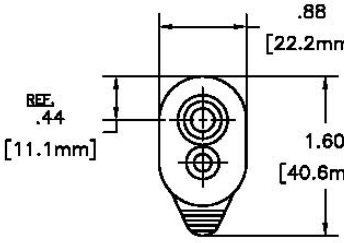

S:
Y CLOSED SPST DOOR JAMB SWITCH
IG FORCE: 1.5 kgf [14.7N/3.3 lbf]

RATING: 5A, 12VDC (WIPING CONTACT)
OLTAGE DROP: <100mV
ICE: 50,000 CYCLES @ 5A, 12.8VDC (LAMP LOAD)

IG TEMPERATURE: −33°C TO +62°C
RAY TEST: 50 hrs. (ASTM−B−117)

TOR: W−ST1−013
.: W−ST−710−S

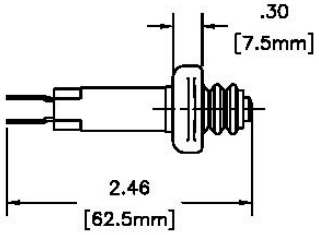

UNCONTROL

UNLESS OTHERWISE SPECIFIED TOLERANCES ARE AS FOLLOWS:		DATE 4-28-06	NAME
ANGLES:	±2°	DRAWN SAA	
2 PLACE DEC.:	±.03	SCALE FULL	MATE
3 PLACE DEC.:	±.015	CHKD BY	
ALL HOLES:	±.005		

ifications and engineering information disclosed herein are the property of Eberhard Manufacturing Company and are not to be disseminated or reproduced without the express written consent of the matter disclosed herein. In accepting loan of this drawing, recipient agrees to keep it and the matter disclosed herein in confidence and not to use or permit their use in any way.
n Company, 21944 Drake Road, Cleveland, Ohio 44149-9712 © 2016 EBERHARD MFG. CO.

REVISION HISTORY	
REV	DESCRIPTION
	CONVERTED TO 3D

16746-50PK
POWER LOCK SWITCH KIT

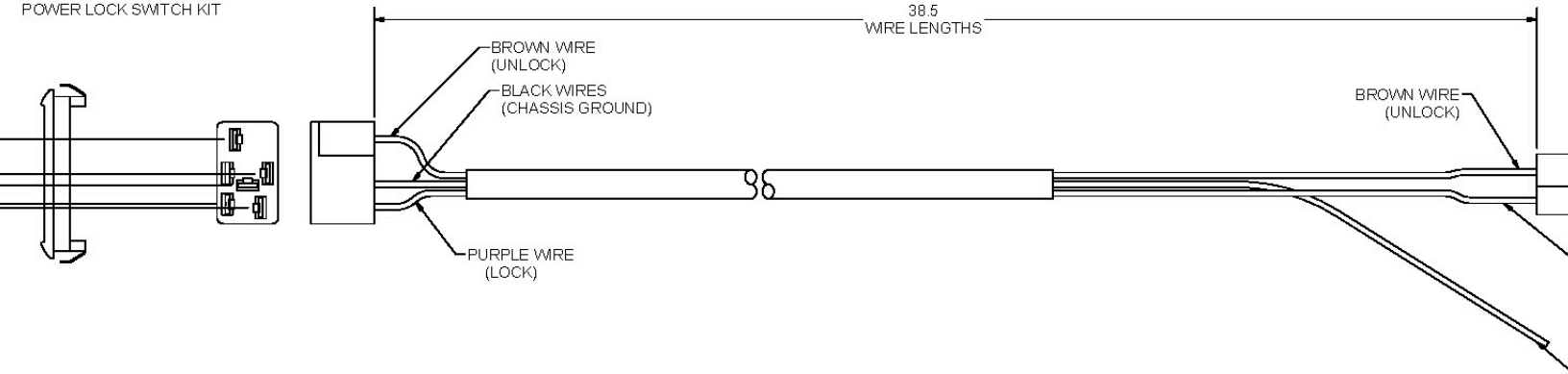

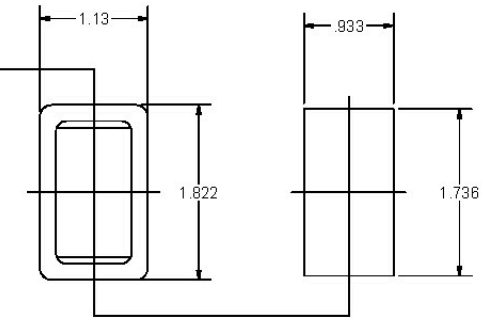

FRONT VIEW
OF TRIM PLATE

SUGGESTED OUTLINE
OF CUTOUT

NOTES:
1. BROWN WIRE (UNLOCK) - CONNECTS TO THE BLUE/WHITE WIRE IN THE 16720-6 CAB WIRE HARNESS.
   PURPLE WIRE (LOCK) - CONNECTS TO THE GREEN/WHITE WIRE IN THE 16720-6 CAB WIRE HARNESS.
   BLACK WIRES (CHASSIS GROUND)
   GRAY WIRE (ILLUMINATION) - CONNECTS TO THE PARKING LIGHT CIRCUIT ON THE VEHICLE.
2. JUMPERS ON THE 16720-50PK CONTROL MODULE WILL NEED TO BE CHANGED TO NEGATIVE POLARITY.
3. 1-16746-50PK POWER LOCK SWITCH KIT AND 1-16746-P5 CONNECTOR PACKAGE TO BE SHIPPED LOOSE, BULK PACKED.

16746-P5
CONNECTOR PACKAGE

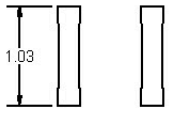

16746-30
BUTT SPLICE
CONNECTOR
2 REQ'D

16746-31
INSULATE
FOR #10 S
2 REQ'D

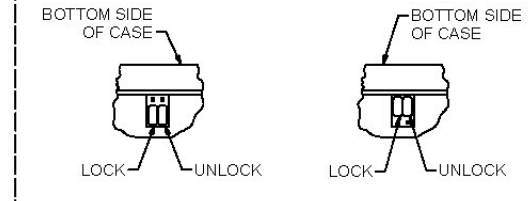

POSITIVE
POLARITY SETTING

NEGATIVE
POLARITY SETTING

16720-50PK CONTROL MODULE
JUMPER SETTINGS FOR POSITIVE OR NEGATIVE POLARITY SYSTEMS. STANDARD CONTROL MODULE IS SET TO POSITIVE POLARITY SETTING.

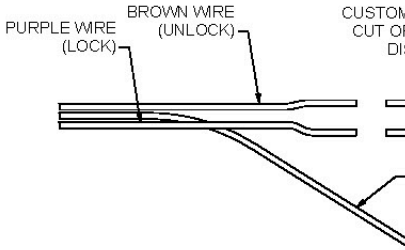

NOTE:
CUSTOMER TO CUT OFF TERMINAL E
ATTACH WIRES TO THE 16720-6 CAB
HARNESS USING CONNECTORS SUP
16746-P5 CONNECTOR PACKAGE.

ER SWITCH
OFF - ON

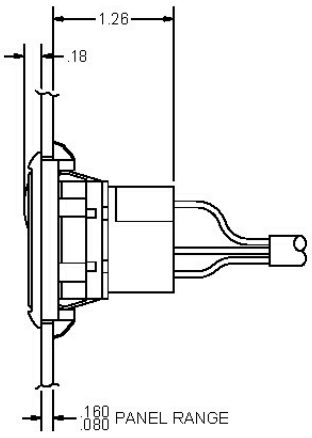

UNCONTROLLED COPY

SUPERSEDES DRAWING 16746-U DATED 12-17-03

THIS DOCUMENT IS IN ACCORDANCE WITH ASME Y14.15-2009			
UNLESS OTHERWISE SPECIFIED TOLERANCES ARE AS FOLLOWS:			
	IN	MM	
ANG LES:	±2'	±2'	
2 PLACE DEC :	±.03	±.76	
3 PLACE DEC :	±.015	±.38	
ALL HOLES:	±.005	±.13	
DATE	1/29/2016		
DR BY	FLP		
SCALE	FULL		
CHK BY			
NAME			
MATERIAL			

ifications and engineering information disclosed herein are the property of Eberhard Manufacturing Company and are not to be disclosed, utilized or reproduced without express written consent. the matter disclosed herein. In accepting loan of this drawing, recipient agrees to keep in trust the matter disclosed herein in confidence and not to use or permit its use in any way rd Company, 21944 Drake Road, Cleveland, Ohio 44149-2712 © 2016 EBERHARD MFG. CO.

REVISION HISTORY		
REV	DESCRIPTION	
	CONVERTED TO 3D	5/

1-16746-50PK
POWER LOCK SWITCH KIT
(ILLUMINATED)

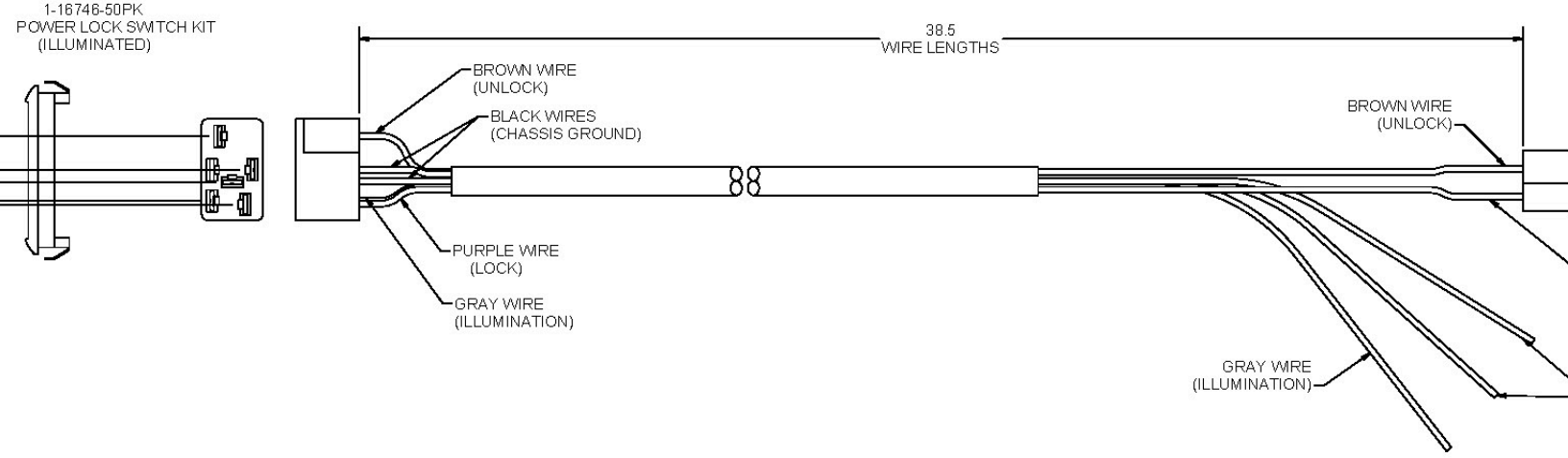

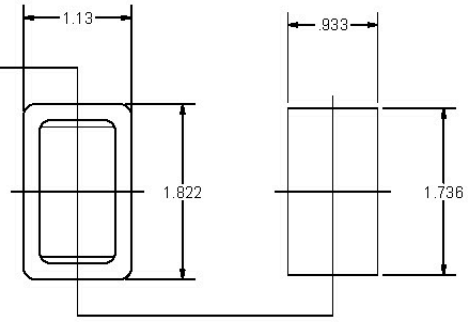

NOTES:
1. BROWN WIRE (UNLOCK) - CONNECTS TO THE BLUE/WHITE WIRE IN THE 16720-6 CAB WIRE HARNESS.
   PURPLE WIRE (LOCK) - CONNECTS TO THE GREEN/WHITE WIRE IN THE 16720-6 CAB WIRE HARNESS.
   BLACK WIRES (CHASSIS GROUND)
   GRAY WIRE (ILLUMINATION) - CONNECTS TO THE PARKING LIGHT CIRCUIT ON THE VEHICLE.
2. JUMPERS ON THE 16720-50PK CONTROL MODULE WILL NEED TO BE CHANGED TO NEGATIVE POLARITY.
3. 1-16746-50PK POWER LOCK SWITCH KIT AND 1-16746-P5 CONNECTOR PACKAGE TO BE SHIPPED LOOSE, BULK PACKED.

1-16746-P5
CONNECTOR PACKAGE

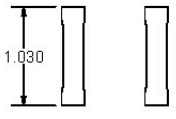

16746-30
BUTT SPLICE
CONNECTOR
2 REQ'D

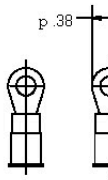

16746-31
INSULATED
FOR #10 ST
2 REQ'D

FRONT VIEW
OF TRIM PLATE

SUGGESTED OUTLINE
OF CUTOUT

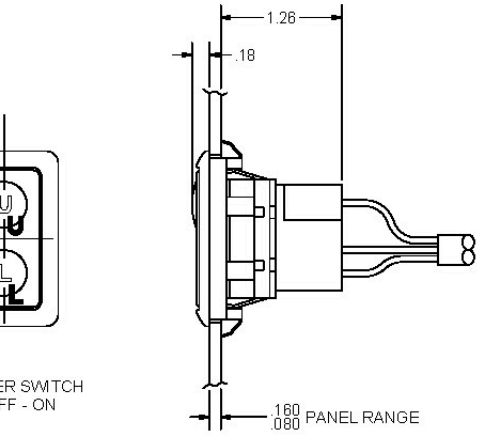

ER SWITCH
FF - ON

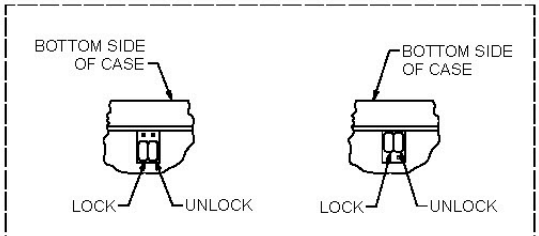

POSITIVE
POLARITY SETTING

NEGATIVE
POLARITY SETTING

16720-50PK CONTROL MODULE
JUMPER SETTINGS FOR POSITIVE OR NEGATIVE POLARITY SYSTEMS. STANDARD CONTROL MODULE IS SET TO POSITIVE POLARITY SETTING.

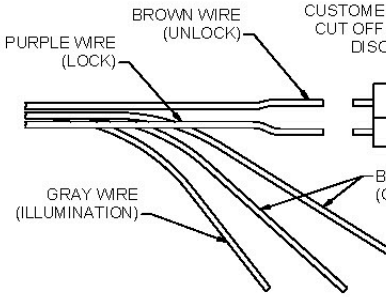

NOTE:
CUSTOMER TO CUT OFF TERMINAL B
ATTACH WIRES TO THE 16720-6 CAB W
HARNESS USING CONNECTORS SUPP
1-16746-P5 CONNECTOR PACKAGE.

UNCONTROLLED COPY

SUPERSEDES DRAWING 1-16746-U DATED 12-17-03

THIS DOCUMENT IS IN ACCORDANCE WITH ASME Y14.15-2009

LINEAR DIMENSIONS INCH
UNLESS OTHERWISE SPECIFIED TOLERANCES ARE AS FOLLOWS:

	IN	
ANGLES:	± 2°	± 2°
2 PLACE DEC.:	± .03	± .76
3 PLACE DEC.:	± .015	± .38
ALL HOLES:	± .005	± .13

DATE 1/30/2015
DRWN FLP
SCALE FULL
CHKD

NAME P
(ILLUM
MATERIAL

Eberhard Manufacturing Company
POWER-UP Locking System with Built-In Alarm
Key Cylinder

Typical assembly of a power locking key cylinder:

Configuration of power locking key cylinders will vary depending on the application. The ability to make various handle configurations power locking will need to be reviewed and verified on a product by product basis.
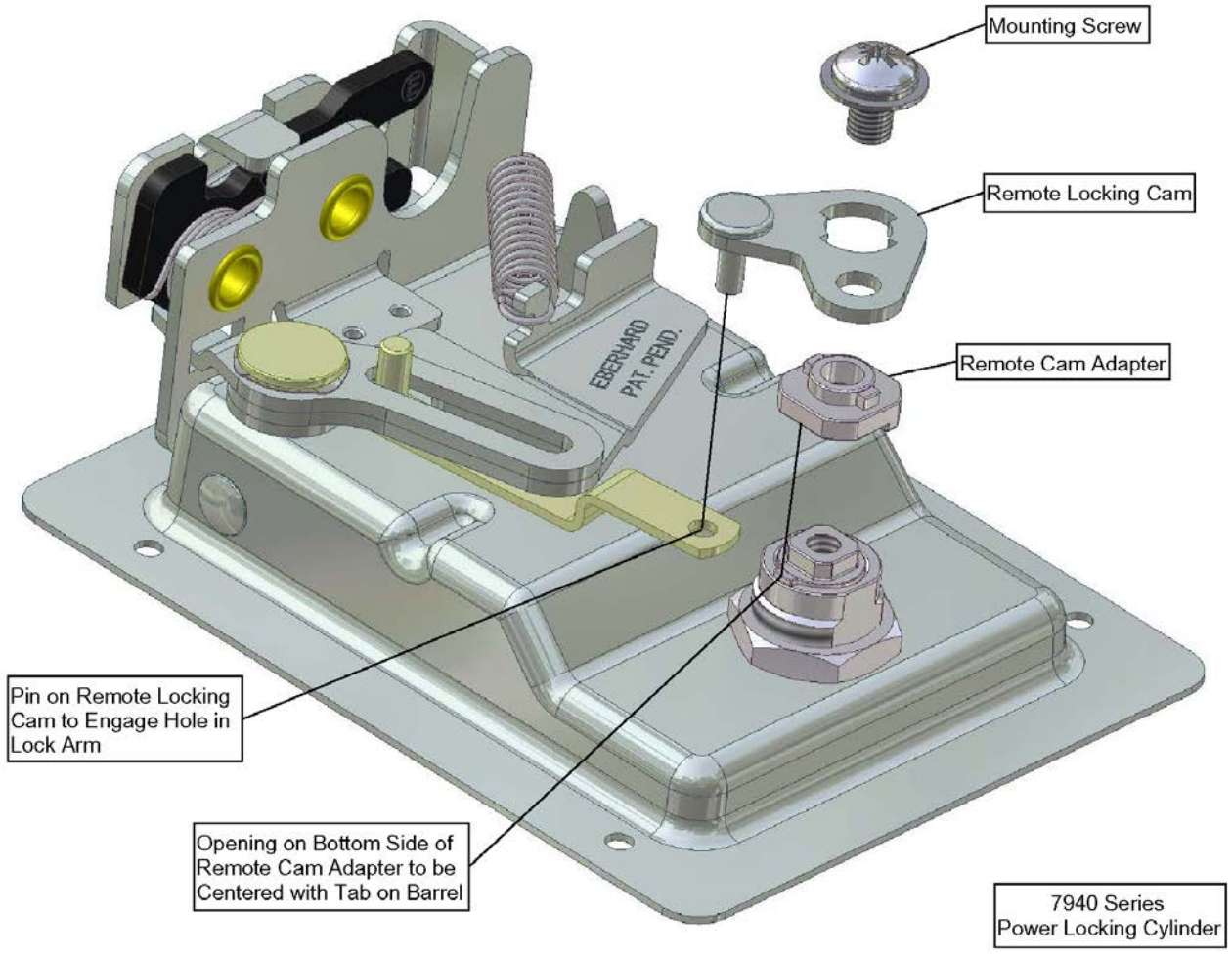
For reference only, the components are to be assembled as shown to enable proper function with the power actuators. After assembly, the key cylinder and remote locking cam are to be able to rotate 90° clockwise and counterclockwise independently. The key is to be removable in one position only. This will enable the power actuator to operate the cam when the key is not installed.