Eberhard Manufacturing Company

Power-Up Locking System With Light Feature
Operations and Applications Manual

This Manual and its entire contents disclosed herein are the property of the Eberhard Manufacturing Company, Division of The Eastern Company, and are not to be reproduced without written consent of Eberhard.

Some or all of the products (or configurations thereof) shown in this catalog may be covered by one or more U.S. or foreign design or utility patents, common law trademarks, and/or federally registered trademarks.

Drawings and dimensions shown in this catalog are for reference only. For manufacturing production or tooling purposes, obtain current engineering print from factory.

THE EASTERN COMPANY

P.O. Box 460
Naugatuck, Connecticut 06770-0460
Phone: (203) 729-2255
Fax: (203) 723-8653
E-Mail: ir@easterncompany.com
www.easterncompany.com
ASE: EML

A Division of the Eastern Company

EBERHARD MANUFACTURING COMPANY

21944 Drake Road
Cleveland, Ohio 44149
Phone: (440) 238-9720
Toll Free: (800) 334-6706
Fax: (440) 572-2732
www.eberhard.com

A Wholly Owned Subsidiary of The Eastern Company

EBERHARD HARDWARE MFG., LTD.

Box 367
Tilsonburg, Ontario N4G 4H8
Phone: (519) 842-8457
Toll Free: (800) 567-3344
Fax: (519) 688-0575
www.eberhardcanada.com
ISO 9001 Registered

© 2019, Eberhard Mfg. Company, A Division of the Eastern Company

Table of Contents:

Supplied Hardware:

- Standard System – 7 Compartment Door Locks: ..... Page 1
- Expanded System – 18 Compartment Door Locks: ..... Page 1
- Options: ..... Page 1

System Protection:

- Electrical Protection: ..... Page 2
- System Protection: ..... Page 2
- Dome Light Function: ..... Page 2
- 16720-1 Power Actuator Specifications: ..... Page 2
- 16720-5 Key Fob (Transmitter) Specifications: ..... Page 2

Wiring Breakdown:

- Base System with (7) Compartment Door Locks: ..... Page 3
- Expansion System with (11) Compartment Door Locks: ..... Page 3
- Expansion System with (8) to (18) Compartment Door Locks: ..... Page 3
- 1-16720-4 Control Module and 1-16720-6 Cab Wire Harness: ..... Page 3-4
- 2-16720-7 Compartment Wire Harness: ..... Page 4
- 2-16720-8 Expansion Relay Wire Harness: ..... Page 5
- 2-16720-9 Expansion Compartment Wire Harness: ..... Page 5
- 2-16720-10 Expansion Compartment Wire Harness: ..... Page 6
- 16720-1 Power Actuator: ..... Page 6
- 16746-U Power 3 Way Toggle Switch Kit W/Connectors: ..... Page 7
- 1-16746-U Illuminated Power 3 Way Toggle Switch Kit W/Connectors: ..... Page 7-8

Miscellaneous:

- Setting for Positive or Negative Polarity: ..... Page 9
- Programming the Key Fobs: ..... Page 9
- Replacement Components: ..... Page 9

Drawings:

- Power-Up Component Drawings: ..... Page 10-21
- Power Locking Key Cylinder: ..... Page 22
- Power-Up Sales Brochure: ..... Page 23-24

Eberhard Manufacturing Company
POWER-UP Locking System – Supplied Hardware

Base System for (7) compartment door locks:

- 1-16720-50PK Control Module W/2 Key fobs and Dome Light Feature
  Includes: 1-16720-4 Control Module with Dome Light Feature – Qty. (1)
  16720-5 Key Fob (Transmitter) – Qty. (2)
- 16720-1 Power Actuator – Qty. (7)
- 16720-2 Power Actuator Mtg. Screws – Phillips Pan Head #8-18 Type "AB" Thread – Qty. (14)
- 16720-3 Connecting Rod – Qty. (7)
- 1-16720-6 Cab Wire Harness with Dome Light Feature – Qty. (1)
  Provides independent power locking for compartment doors
  Provides optional connection to OEM power locking system using OEM fob (transmitter)
  Provides optional power for dome light feature
- 2-16720-7 Compartment Wire Harness with Dome Light Feature – Qty. (1)
  Provides (3) actuators for road side – (4) actuator for curb side
  Provides power leads for self-grounding dome lights

Expansion System for (18) compartment door locks:

- 2-16720-8 Expansion Relay Harness with Dome Light feature – Qty. (1)
- 2-16720-9 Expansion Compartment Wire Harness with Dome Light Feature – Qty. (1)
  * Requires 2-16720-8 Expansion Relay Harness with Dome Light Feature
  Adds an additional (6) actuators for road side – (5) actuator for curb side
  Provides for a total of (9) actuators for road side – (9) actuator for curb side total

Options:

- 2-16720-10 Expansion Compartment Wire Harness with Dome Light Feature – Qty. (1)
  Adds (2) actuators per side to 2-16720-7 Compartment Wire Harness with Dome Light Feature
  * Does not require 2-16720-8 Expansion Relay Harness with dome Light Feature
  Provides for a total of (5) actuators for road side – (6) actuators for curb side total
- 16746-U Power 3 Way Toggle Switch Kit W/Connectors – Qty. (1)
  Provides a non-illuminated toggle switch for the compartment door locks to a cab without an OEM power locking system
  Includes: 3 Way Toggle Switch, non-illuminated – Qty. (1)
  Trim Plate – Qty. (1)
  Wire Harness – Qty. (1)
  Butt Splice Connector – Qty. (2)
  Insulated Ring Terminal for #10 Stud – Qty. (1)
- 1-16746-U Power 3 Way Toggle Switch Kit W/Connectors – Qty. (1)
  Provides an illuminated toggle switch for the compartment door locks to a cab without an OEM power locking system
  Includes: 3 Way Toggle Switch, illuminated – Qty. (1)
  Trim Plate – Qty. (1)
  Wire Harness – Qty. (1)
  Butt Splice Connector – Qty. (2)
  Insulated Ring Terminal for #10 Stud – Qty. (2)

Eberhard Manufacturing Company
POWER-UP Locking System – System Protection

Electrical Protection:

- **1-16720-4 Control Module: Provides over-trigger protection for power actuators**
- **1-16720-6 Cab Wire Harness: In-line fuse protection – 40 amp for output, 5 amp for processor & 15amp for lights**
- **2-16720-8 Expansion Relay Wire Harness: Individual relay for each side of the vehicle. In-line fuse protection – 40 amp for power**

System Protection:

- **1-16720-4 Control Module:**
  - ► **Incorporates a "Lock Pulse Timer" to provide a 0.4 second pulse from the control module to the actuators. If the buttons on the key fob are held down for an extended period, the "Lock Pulse Timer" will prevent the actuators from being damaged by over firing.**
  - ► **Incorporates a "Time Out" feature that prevents damage to the actuators by shutting down the system for 30 seconds if the buttons on the key fob are activated more than 8 times in a 30 second period. After the 30 second "Time Out" period, the system will function as normal.**
  - ► **Can hold up to (4) key fobs with different signals. If any key fobs are lost or damaged and needs to be replaced, the control module can learn/program new and/or additional key fobs.**
  - ► **Can be set-up for use in either positive or negative polarity.**

- **1-16720-4 Control Module – Dome Light Function:**
  - ► **Incorporates a feature to activate/deactivate dome lights for up to 8 compartments. On the key fob, when Button #2 (Unlock) is depressed, the dome lights will be activated for 10 minutes. When Button #1 (Lock) is depressed, the dome lights will be turned off. Optionally, when Button #1 (Lock) and Button #3 (N/A) are depressed at the same time, the dome lights will be activated for 10 minutes. By depressing Button #1 (Lock) and Button #4 (N/A) at the same time, the dome lights will be turned off.**

- **16720-1 Power Actuators:**
  - ► **Working voltage: 8.8 VDC to 13.7 VDC.**
  - ► **Current absorption: 4.5 A (Max.).**
  - ► **Temperature range: -18.4° F to +188.6° F.**
  - ► **Power: 7.8 lbf.**

- **16720-5 Key Fob (Transmitter):**
  - ► **Working range of 150 feet. Maximum.**
  - ► **Frequency = 303.875 MHz, Rolling Code**
  - ► **Separate "Lock" & "Unlock" Buttons.**

Eberhard Manufacturing Company
POWER-UP Locking System – Wiring Breakdown

Locate and mount 1-16720-4 Control module in a high position in front drivers' side compartment. Make sure the control module is in a position where it will not be damaged or come into contact with water.

Make wire connections as noted below:

For base system with (7) compartment door locks, connect wire harnesses as follows:
1-16720-4 Control Module to 1-16720-6 Cab Wire Harness to 2-16720-7 Compartment Wire Harness.

For system with (11) compartment door locks, connect wire harnesses as follows:
1-16720-4 Control Module to 1-16720-6 Cab Wire Harness to 2-16720-7 Compartment Wire Harness to 2-16720-10 Expansion Compartment Wire Harness.

For system with (8) to (18) compartment door locks, connect wire harnesses as follows:
1-16720-4 Control Module to 1-16720-6 Cab Wire Harness to 2-16720-8 Expansion Relay Wire Harness to 2-16720-7 Compartment Wire Harness to 2-16720-9 Expansion Compartment Wire Harness.

1-16720-4 Control Module and 1-16720-6 Cab Wire Harness with Dome Light Feature:

Terminal connections from outer terminal towards the center on control module:

- **Terminal #1: Blue Wire – Motor connection for actuators – 12 ga. wire**
- **Terminal #2: Green Wire – Motor connection for actuators – 12 ga. wire**
- **Terminal #3: Red Wire – Wire connection for power from cab – 14 ga. Wire**
- **Terminal #4: Black Wire – Wire connection for chassis ground (actuators) – 14 ga. wire**
- **Terminal #5: Black Wire – Wire connection for chassis ground (actuators) – 14 ga. wire**

10 Pin Connector:

- **Position #1: Black Wire – Ground – 18 ga. wire**
- **Position #2: Blue/White Wire – Wire connection to OEM actuator, unlock circuit – 18 ga. Wire Wire length = 15 feet, non terminated end**
  – Optional wire connection to the 16746-U or 1-16746-U unlock circuit (Brown Wire) – 20 ga. Wire
- **Position #3: Dark Green – Wire connection to optional dome light control circuit – 18 ga. Wire**
- **Position #6: Red Wire – Power – 18 ga. Wire**
- **Position #8: Green/White Wire – Wire connection to OEM actuator, lock circuit – 18 ga. Wire Wire length = 15 feet, non terminated end**
  – Optional wire connection to the 16746-U or 1-16746-U lock circuit (Purple Wire) – 20 ga. Wire

- **Position #4, #5, #7, #9 & #10 are not used.**

Eberhard Manufacturing Company
POWER-UP Locking System – Wiring Breakdown

NOTE: Blue/White wire & Green/White wire are for optional connection to OEM power locking system. These wires can be run along with the Red power wire listed below to the cab. Run the wires along the factory wire harness using wire harness holders in the frame rails. Drill and grommet all holes in vehicle as required to prevent accidental grounding.

1-16720-6 Cab Wire Harness with Dome Light Feature:

- **Red Wire – Wire connection to auxiliary OEM power source in cab – 10 ga. wire**
  – Wire length = 16 feet
- **Black Wire – Wire connection for chassis ground – 10 ga. Wire**
  – Wire length = 2 feet
- **End Connector – Connector (female) on end of cab wire harness to plug into mating connector (male) on 2-16720-7 Compartment Wire Harness or optional 2-16720-8 Expansion Relay Wire Harness.**

NOTE: Red power wire can be run along with the optional Blue/White & Green/White OEM power locking connection wires to the cab. Run the wires along the factory wire harness using wire harness holders in the frame rails. Drill and grommet all holes in vehicle as required to prevent accidental grounding.

2-16720-7 Compartment Wire Harness with Dome Light Feature:
Base System for (7) compartment door locks:

- **Main trunk wires for both road side & curb side are 14 ga.**
- **Branch wires for connection to the actuators are 18 ga.**
- **Branch wires for connection to the dome lights are 14 ga.**

Harness branch wire/power actuator wire connections – Retracting actuator to lock:

- **Green harness wire connects to Blue power actuator wire**
- **Blue harness wire connects to Red power actuator wire**

Harness branch wire/power actuator wire connections – Extending actuator to lock:

- **Green harness wire connects to Red power actuator wire**
- **Blue harness wire connects to blue power actuator wire**

- **End Connector – Connector (male) on end of compartment wire harness to plug into mating connector (female) on 1-16720-6 Cab Wire Harness or optional 2-16720-8 Expansion Relay Wire Harness.**
- **End Connectors – Connectors (female) on end of compartment wire harness to plug into mating connectors (male) on 2-16720-9 Expansion Compartment Wire Harness or optional 2-16720-10 Expansion Compartment Wire Harness.**

NOTE: Drill and grommet all holes in vehicle as required to prevent accidental grounding.

Eberhard Manufacturing Company
POWER-UP Locking System – Wiring Breakdown

2-16720-8 Expansion Relay Wire Harness with Dome Light Feature:
Expansion onto 2-16720-7 Compartment Wire Harness for (8) to (18) compartment door locks:
Required for 2-16720-9 Expansion Compartment Wire Harness.

- **Red Wire – Wire connection to auxiliary OEM power source in cab – 10 ga. wire**
  – Wire length = 18 feet 2 in.
- **Black Wire – Wire connection for chassis ground – 10 ga. Wire**
  – Wire length = 4 feet

- **End Connector – Connector (male) on end of expansion relay wire harness to plug into mating connector (female) on 1-16720-6 Cab Wire Harness.**
- **End Connectors – Connector (female) on end of expansion relay wire harness to plug into mating connector (male) on 2-16720-7 Compartment Wire Harness.**

NOTES: 1) Drill and grommet all holes in vehicle as required to prevent accidental grounding.
2) Locate and mount relay blocks in a high position in front drivers' side compartment. Make sure the relays are in a position where they can be accessed for replacement if necessary and where they will not be damaged or come into contact with water.

2-16720-9 Expansion Compartment Wire Harness with Dome Light Feature:
Expansion onto 2-16720-7 Compartment Wire Harness for (8) to (18) compartment door locks:
Requires 2-16720-8 Expansion Relay Wire Harness.

- **Main trunk wires for both road side & curb side are 14 ga.**
- **Branch wires for connection to the actuators are 18 ga.**
- **Branch wires for connection to the dome lights are 14 ga.**

Harness branch wire/power actuator wire connections – Retracting actuator to lock:

- **Green harness wire connects to Blue power actuator wire**
- **Blue harness wire connects to Red power actuator wire**

Harness branch wire/power actuator wire connections – Extending actuator to lock:

- **Green harness wire connects to Red power actuator wire**
- **Blue harness wire connects to Blue power actuator wire**

- **End Connectors – Connectors (male) on end of expansion compartment wire harness to plug into mating connectors (female) on 2-16720-7 Compartment Wire Harness.**

NOTE: Drill and grommet all holes in vehicle as required to prevent accidental grounding.

Eberhard Manufacturing Company
POWER-UP Locking System – Wiring Breakdown

2-16720-10 Expansion Compartment Wire Harness:

Expansion onto 2-16720-7 Compartment Wire Harness for (11) compartment door locks:

- **Main trunk wires for both road side & curb side are 14 ga.**
- **Branch wires for connection to the actuators are 18 ga.**
- **Branch wires for connection to the dome lights are 14 ga.**

Harness branch wire/power actuator wire connections – Retracting actuator to lock:

- **Green harness wire connects to Blue power actuator wire**
- **Blue harness wire connects to Red power actuator wire**

Harness branch wire/power actuator wire connections – Extending actuator to lock:

- **Green harness wire connects to Red power actuator wire**
- **Blue harness wire connects to Blue power actuator wire**

- **End Connectors – Connectors (male) on end of expansion compartment wire harness to plug into mating connectors (female) on 2-16720-7 Compartment Wire Harness.**

NOTE: Drill and grommet all holes in vehicle as required to prevent accidental grounding.

16720-1 Power Actuator:

- **Actuator wires are 18 ga.**

Harness branch wire/power actuator wire connections – Retracting actuator to lock:

- **Green harness wire connects to Blue power actuator wire**
- **Blue harness wire connects to Red power actuator wire**

Harness branch wire/power actuator wire connections – Extending actuator to lock:

- **Green harness wire connects to Red power actuator wire**
- **Blue harness wire connects to Blue power actuator wire**

NOTES: 1) Drill and grommet all holes in vehicle as required to prevent accidental grounding.
2) Power actuators to be mounted with the protruding motor housing in an upward position to prevent condensation from pooling around the internal motor.

Eberhard Manufacturing Company
POWER-UP Locking System – Wiring Breakdown

16746-U Power 3 Way Toggle Switch Kit W/Connectors:

Non-illuminated toggle switch for the compartment door locks to a cab without an OEM power locking system.

Locate a position for mounting and cut a .93" wide x 1.74" tall opening to receive the trim plate and toggle switch. Trim plate will fit a panel of .08" to .16" thick.

Make wire connections as noted below:

- **Purple Wire – Wire connection to the Green/White lock circuit from the 1-16720-6 Cab Wire Harness – 20 ga. wire**
  Wire length = 3 feet 2-1/2 in.
  Use supplied butt splice connector to make wire connection.
- **Brown Wire – Wire connection to the Blue/White unlock circuit from the 1-16720-6 Cab Wire Harness – 20 ga. Wire**
  Wire length = 3 feet 2-1/2 in.
  Use supplied butt splice connector to make wire connection.
- **Black Wire – Wire connection for chassis ground – 20 ga. Wire**
  Wire length = 3 feet 2-1/2 in.
  Use supplied insulated ring terminal to make wire connection.

NOTES: 1) Drill and grommet all holes in vehicle as required to prevent accidental grounding.
2) Plastic connector on the end of the wire harness is not required. Customer to cut off and discard. Use the supplied butt splice connectors and insulated ring terminal to make the wire connections.
3) Jumpers on the 1-16720-4 Control Module need to be changed to the negative polarity settings. Position the jumpers located on the bottom end of the control module on the bottom two pins.

1-16746-U Power 3 Way Toggle Switch Kit W/Connectors:

Illuminated toggle switch for the compartment door locks to a cab without an OEM power locking system.

Locate a position for mounting and cut a .93" wide x 1.74" tall opening to receive the trim plate and toggle switch. Trim plate will fit a panel of .08" to .16" thick.

Eberhard Manufacturing Company
POWER-UP Locking System – Wiring Breakdown

Make wire connections as noted below:

- **Purple Wire – Wire connection to the Green/White lock circuit from the 1-16720-6 Cab Wire Harness – 20 ga. wire**
  Wire length = 3 feet 2-1/2 in.
  Use supplied butt splice connector to make wire connection.
- **Brown Wire – Wire connection to the Blue/White unlock circuit from the 1-16720-6 Cab Wire Harness – 20 ga. Wire**
  Wire length = 3 feet 2-1/2 in.
  Use supplied butt splice connector to make wire connection.
- **Black Wire – Wire connection for chassis ground – 20 ga. Wire**
  Wire length = 3 feet 2-1/2 in.
  Use supplied insulated ring terminal to make wire connection.
- **Black Wire – Wire connection for chassis ground – 20 ga. Wire**
  Wire length = 3 feet 2-1/2 in.
  Use supplied insulated ring terminal to make wire connection.
- **Gray Wire – Wire connection to the parking light circuit on the vehicle – 20 ga. Wire**
  Wire length = 3 feet 2-1/2 in.

NOTES: 1) Drill and grommet all holes in vehicle as required to prevent accidental grounding.
2) Plastic connector on the end of the wire harness is not required. Customer to cut off and discard. Use the supplied butt splice connectors and insulated ring terminals to make the wire connections.
3) Jumpers on the 1-16720-4 Control Module need to be changed to the negative polarity settings. Position the jumpers located on the bottom end of the control module on the bottom two pins.

Eberhard Manufacturing Company
POWER-UP Locking System – Miscellaneous

Setting for positive or negative polarity:

For positive polarity – Standard setting: **Position the jumpers located on the bottom end of the control module on the top two pins.**

For negative polarity: **Position the jumpers located on the bottom end of the control module on the bottom two pins.**

Programming the key fobs:

Press the program button on the side of the control module (3) times; the red LED will then light up. Press button #1 on all of the key fobs that will be associated with the vehicle, (up to 4 key fobs), within 10 seconds of the red LED lighting up. When the LED light goes off, the key fobs are then programmed to the control module. Test each key fob by locking and unlocking the system to ensure proper operation. NOTE: All key fobs must be programmed at the same time using this procedure. Programming one key fob at a time will erase the previous programmed key fob.

Replacement Components:

- **1-16720-6 Cab Wire Harness: In-line fuse:**
  - **Power: 40-Amp fuse – ATC style fuse or equivalent**
  - **Signal: 5-Amp fuse – ATC style fuse or equivalent**
  - **Lights: 15-Amp fuse – ATC style fuse or equivalent**
  - **Dome Light Relay: 30-Amp - Replacement relay p/n: Hella Relay p/n: 49400B or equivalent**
- **2-16720-8 Expansion Relay Wire Harness: Individual relay for each side of the vehicle.**
  - **Relay: 30-Amp - Replacement relay p/n: Hella Relay p/n: 49400B or equivalent**
  - **Power: 40-Amp fuse – ATC style fuse or equivalent**
- **16720-5 Key Fob (Transmitter): 23AP (12V Alkaline), 23-279 (12V Alkaline) or equivalent**

TOM SIDE
F CASE

NEGATIVE
POLARITY SETTING

UNLOCK

* NOTE:
JUMPER SETTINGS FOR POSITIVE OR NEGATIVE POLARITY SYSTEMS. STANDARD CONTROL MODULE IS SET TO POSITIVE POLARITY SETTING.

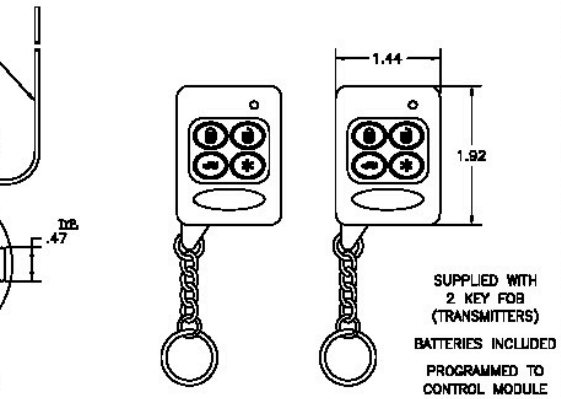

1-16720-5OPK
CONTROL MODULE
W/2 KEY FOB (TRANSMITTERS)
1 REQ'D

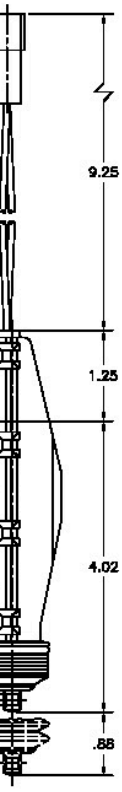

0-1
CTUATOR
Q'D

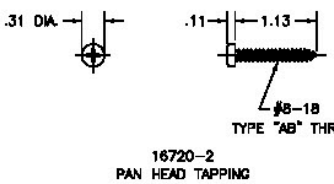

16720-2
PAN HEAD TAPPING
SCREW - TYPE "AB"
14 REQ'D

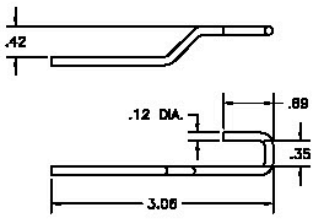

16720-3
CONNECTING ROD
7 REQ'D

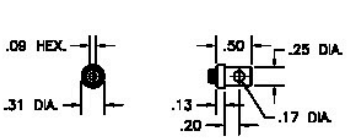

18619-15PK
ROD ADAPTER W/SET SCREW
7 REQ'D

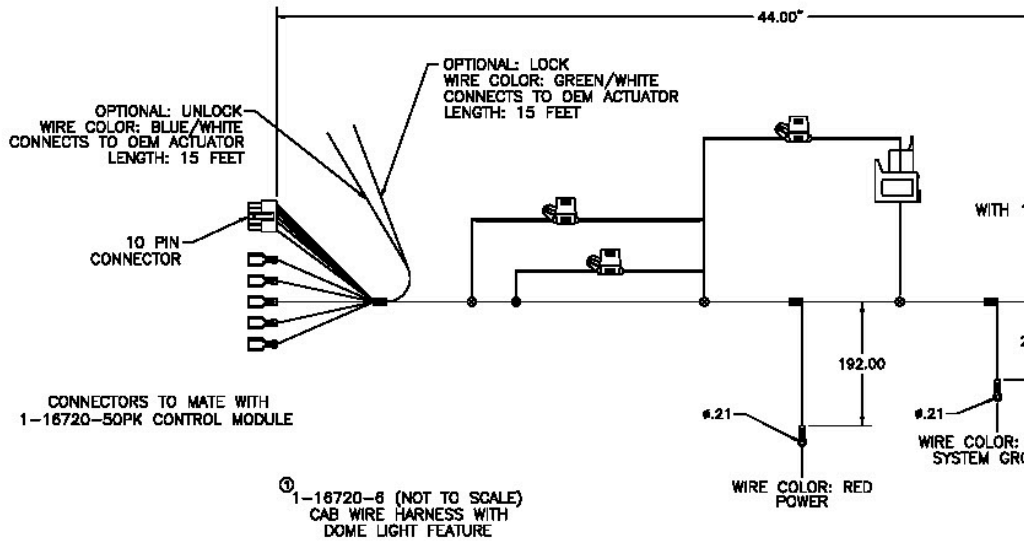

CONNECTORS TO MATE WITH
1-16720-5OPK CONTROL MODULE

① 1-16720-6 (NOT TO SCALE)
CAB WIRE HARNESS WITH
DOME LIGHT FEATURE

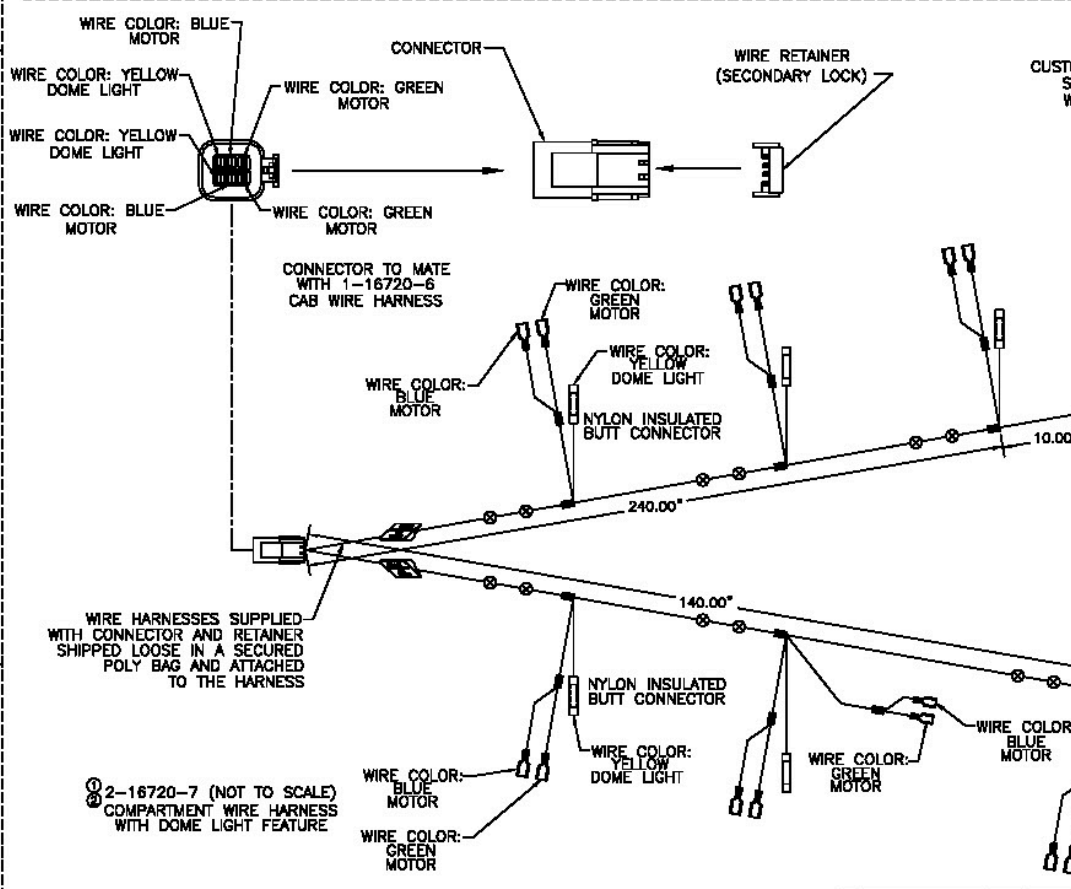

①② 2-16720-7 (NOT TO SCALE)
COMPARTMENT WIRE HARNESS
WITH DOME LIGHT FEATURE

UNCONTROLLED COPY

...ical and engineering information disclosed herein are the property of Eberhard Manufacturing Company and are not to be disseminated or reproduced without express written consent. ...matter disclosed herein. In accepting loan of this drawing, recipient agrees to keep private the matter disclosed herein in confidence and not to use or permit the use in any way ...ompany. 21944 Drake Road, Cleveland, Ohio 44149-9712 © 2016 EBERHARD MFG. CO.

REVISION HIST	
REV	DESCRIPTION
	CONVERTED TO 3D
1	REVISED NOTE, REVISED LABEL
2	REVISED VIEWS

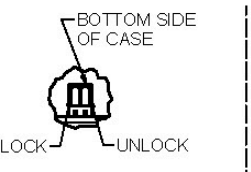

NEGATIVE
POLARITY SETTING

A

POSITIVE OR NEGATIVE
DARD CONTROL MODULE
POLARITY SETTING.

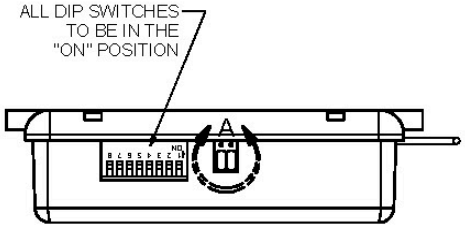

FEATURES:
1. CONTROL MODULE CAN HOLD UP TO (4) KEY FOBS (TRANSMITTERS) WITH DIFFEREN
2. CONTROL MODULE INCORPORATES A LOCK PULSE TIMER THAT PROVIDES A .4 SECO THE CONTROL MODULE TO THE ACTUATORS. IF THE BUTTONS ON THE KEY FOB (TRA HELD DOWN FOR AN EXTENDED PERIOD, THE LOCK PULSE TIMER WILL PREVENT THE FROM BEING DAMAGED.
3. CONTROL MODULE INCORPORATES A TIME-OUT FEATURE THAT ELIMINATES DAMAG BY SHUTTING DOWN THE SYSTEM FOR 30 SECONDS IF THE BUTTONS ON THE KEY FO ARE ACTIVATED MORE THEN 8 TIMES IN A 30 SECOND PERIOD. AFTER THE 30 SECON PERIOD, THE SYSTEM WILL FUNCTION AS NORMAL.
4. CONTROL MODULE INCORPORATES A FEATURE TO ACTIVATE/DEACTIVATE DOME LI BUTTON #2 (UNLOCK) IS ACTIVATED, THE DOME LIGHTS WILL BE ACTIVATED FOR 10 M WHEN BUTTON #1 (LOCK) IS ACTIVATED, THE DOME LIGHTS WILL BE TURNED OFF. O WHEN BUTTON #1 (LOCK) AND BUTTON #3 (N/A) ARE PRESSED AT THE SAME TIME, TH DOME LIGHTS WILL BE ACTIVATED FOR 10 MINUTES. BY PRESSING BUTTON #1 (LOCK BUTTON #4 (N/A) AT THE SAME TIME, THE DOME LIGHTS WILL BE TURNED OFF.
5. KEY FOB (TRANSMITTER) HAS A RANGE OF 150 FEET MAXIMUM.

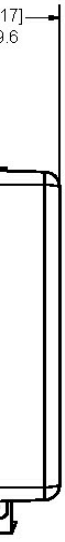

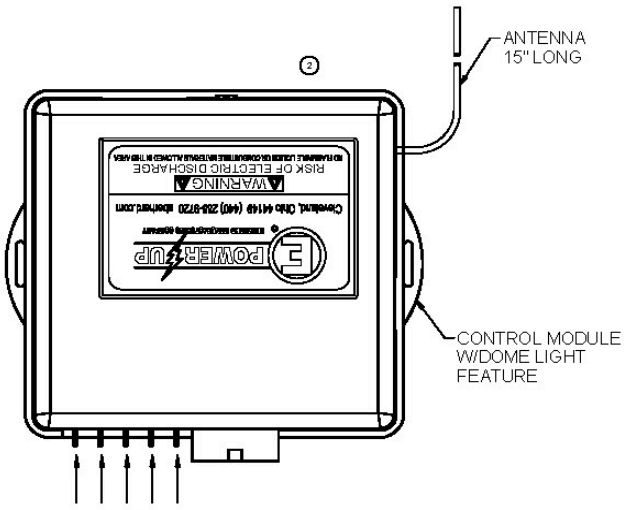

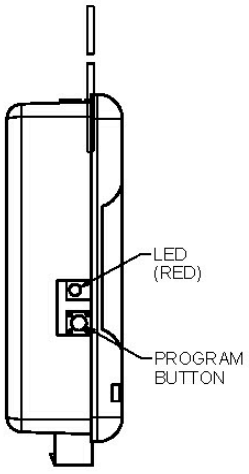

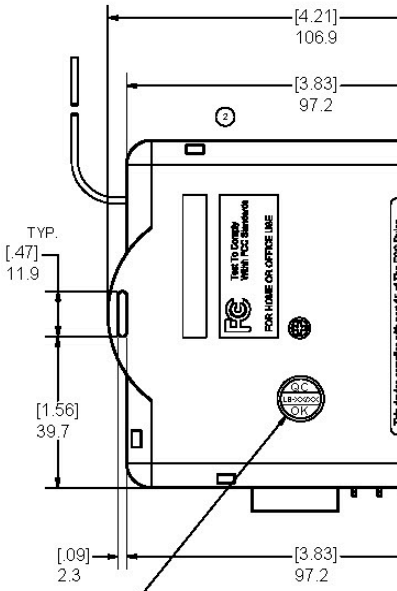

QUALITY CONTROL STICKER
TO BE APPLIED UPON SUCC
COMPLETION OF TESTING

NNECTIONS
E HARNESS:

R ACTUATORS.

R ACTUATORS.

R POWER

ACK):
R CHASSIS
ORS.

ACK):
R CHASSIS
ORS.

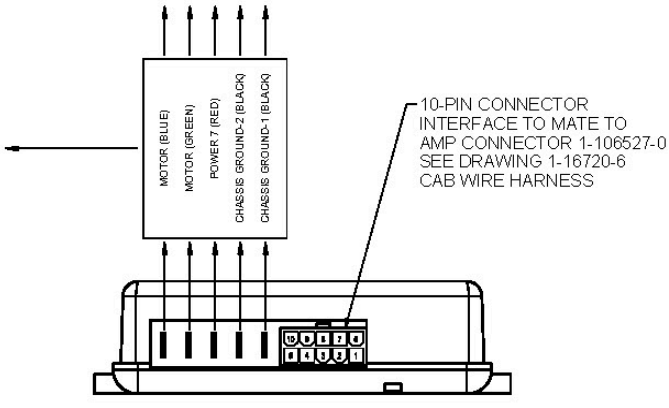

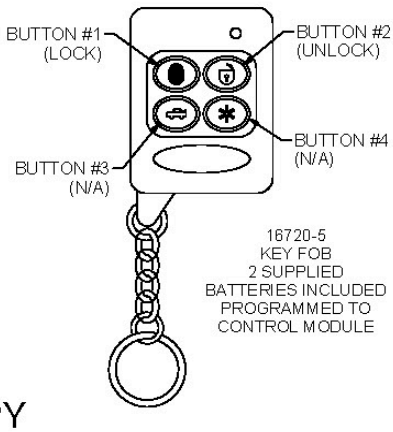

16720-5
KEY FOB
2 SUPPLIED
BATTERIES INCLUDED
PROGRAMMED TO
CONTROL MODULE

NOTE:
TO PROGRAM CONTROL MODUL
KEY FOB (TRANSMITTERS), PRES
BUTTON ON CONTROL MODULE
WILL LIGHT UP, THEN PRESS BU
KEY FOB (TRANSMITTER).

UNCONTROLLED COPY

THIS DOCUMENT IS IN ACCORDANCE WITH ASME Y14.5-2009

LINEAR DIMENSIONS: INCH			DATE	NAME
UNLESS OTHERWISE SPECIFIED TOLERANCES ARE AS FOLLOWS:	IN	MM	3/29/2013	
ANGLES:	± 2°	± 2°	DR BY	
2 PLACE DEC.:	± .03	± .76	FLP	
3 PLACE DEC.:	± .015	± .38	SCALE	
ALL HOLES:	± .005	± .13	FULL	
			CHK BY	

EET 1 OF 2 DATED 12-21-04.

orrtations and engineering information disclosed herein are the property of Eberhard Manufacturing Company and are not to be disseminated or reproduced without express written consent of the matter disclosed herein. By accepting loan of this drawing, recipient agrees to keep it and the matter disclosed herein in confidence and not to use nor permit the use in any way to a Company. 21944 Drake Road, Cleveland, Ohio 44149-0712 © 2016 EBERHARD MFG. CO.

REVISION HISTORY		
REV	DESCRIPTION	
	CONVERTED TO 3D	EN
1	REVISED NOTE, REVISED LABEL	EN
2	RVISED VIEWS	EN

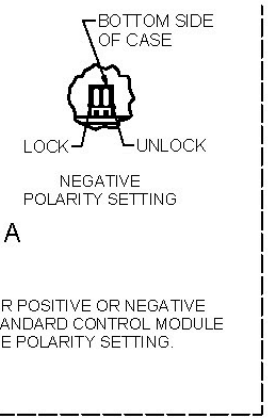

NEGATIVE
POLARITY SETTING

A

R POSITIVE OR NEGATIVE
ANDARD CONTROL MODULE
E POLARITY SETTING.

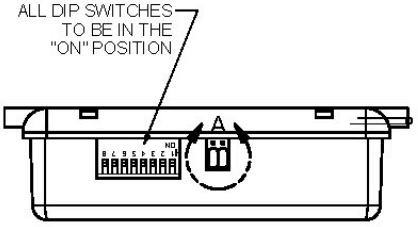

FEATURES:
1. CONTROL MODULE CAN HOLD UP TO (4) KEY FOBS (TRANSMITTERS) WITH DIFFERENT
2. CONTROL MODULE INCORPORATES A LOCK PULSE TIMER THAT PROVIDES A .4 SECO
THE CONTROL MODULE TO THE ACTUATORS. IF THE BUTTONS ON THE KEY FOB (TRA
HELD DOWN FOR AN EXTENDED PERIOD, THE LOCK PULSE TIMER WILL PREVENT THE
FROM BEING DAMAGED.
3. CONTROL MODULE INCORPORATES A TIME-OUT FEATURE THAT ELIMINATES DAMAGE
BY SHUTTING DOWN THE SYSTEM FOR 30 SECONDS IF THE BUTTONS ON THE KEY FO
ARE ACTIVATED MORE THEN 8 TIMES IN A 30 SECOND PERIOD. AFTER THE 30 SECON
PERIOD, THE SYSTEM WILL FUNCTION AS NORMAL.
4. CONTROL MODULE INCORPORATES A HORN/HONK OUTPUT AND A LIGHT/FLASH OUTP
5. CONTROL MODULE INCORPORATES A FEATURE TO ACTIVATE/DEACTIVATE DOME LIG
BUTTON #2 (UNLOCK) IS ACTIVATED, THE DOME LIGHTS WILL BE ACTIVATED FOR 10 M
WHEN BUTTON #1 (LOCK) IS ACTIVATED, THE DOME LIGHTS WILL BE TURNED OFF. OP
WHEN BUTTON #1 (LOCK) AND BUTTON #3 (N/A) ARE PRESSED AT THE SAME TIME, THE
DOME LIGHTS WILL BE ACTIVATED FOR 10 MINUTES. BY PRESSING BUTTON #1 (LOCK)
BUTTON #4 (N/A) AT THE SAME TIME, THE DOME LIGHTS WILL BE TURNED OFF.
6. KEY FOB (TRANSMITTER) HAS A RANGE OF 150 FEET MAXIMUM.

[1.17]
29.6

CONNECTIONS
IRE HARNESS:

FOR ACTUATORS.

FOR ACTUATORS.

FOR POWER

BLACK):
FOR CHASSIS
ATORS.

BLACK):
FOR CHASSIS
ATORS.

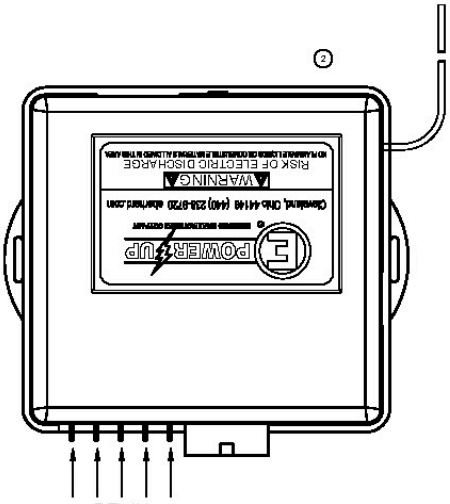

RELAY
I/O

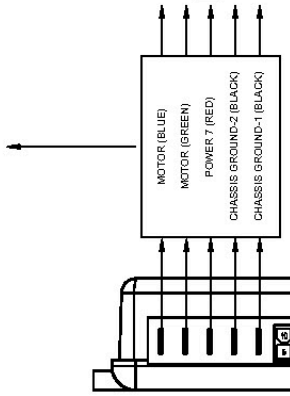

10-PIN
CONNECTOR
INTERFACE TO MATE TO
AMP CONNECTOR 1-106527-0
SEE DRAWING 1-16720-6
CAB WIRE HARNESS

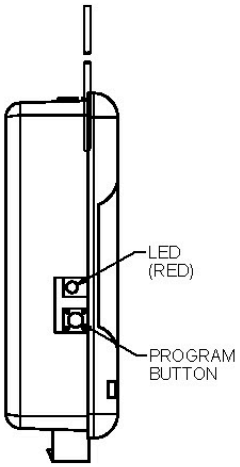

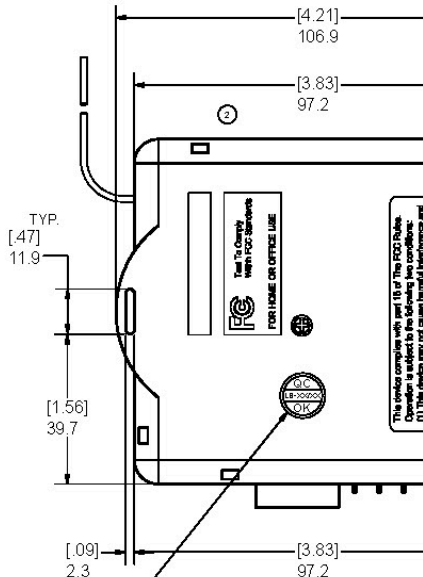

QUALITY CONTROL STICKER W
AND DATE CODE (YEAR/WEEK)
UPON SUCCESSFUL COMPLETI

NOTE:
TO PROGRAM CONTROL MODULE T
KEY FOB (TRANSMITTERS), PRESS T
BUTTON ON CONTROL MODULE (3) T
WILL LIGHT UP, THEN PRESS BUTTO
KEY FOB (TRANSMITTER).

UNCONTROLLED COPY

THIS DOCUMENT IS IN ACCORDANCE WITH ASME Y14.5-2009			
LINEAR MEASURE: INCH		DATE	NAME
UNLESS OTHERWISE SPECIFIED TOLERANCES ARE AS FOLLOWS:		3/29/2013	
	IN MM	DRWN	
ANGLES:	± 2°	± 2°	FLP
2 PLACE DEC.:	± .03	± .76	SCALE
3 PLACE DEC.:	± .015	± .38	FULL
ALL HOLES:	± .005	± .13	CHKD
			MATERIAL

EET 1 OF 2 DATED 1-17-05.

ifications and engineering information disclosed hereon are the property of Eberhard Manufacturing Company and are not to be disseminated or reproduced without express written consent. the matter disclosed hereon. In accepting loan of this drawing, recipient agrees to keep it and the matter disclosed hereon in confidence and not to use nor permit their use in any way rn Company. 21944 Drake Road, Cleveland, Ohio 44149-9712 © 2013 EBERHARD MFG. CO.

REV	
	CONVERTED TO 3D

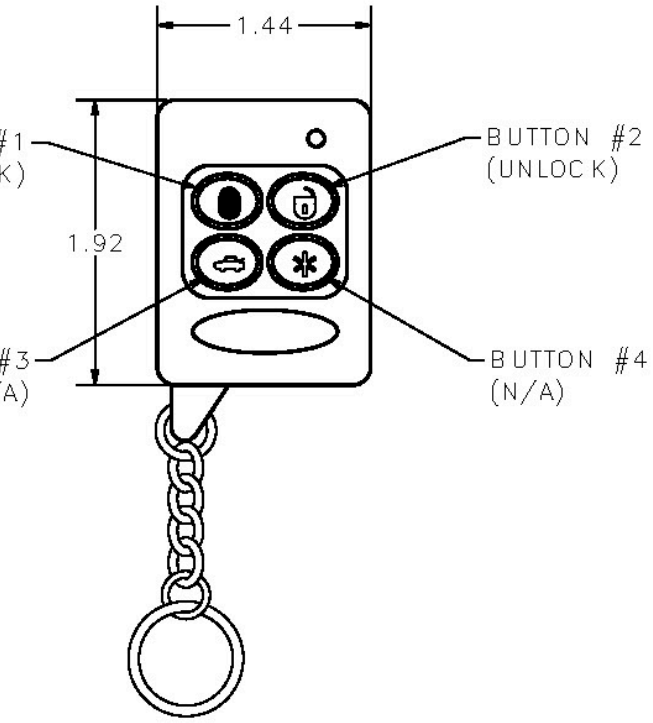

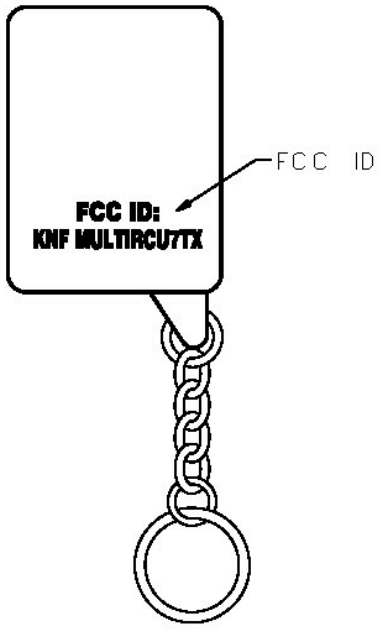

OGRAMMING THE KEY FOBS:
TO PROGRAM THE CONTROL MODULE TO ADDITIONAL KEY FOB (TRANSMITTERS), PRESS THE PROGRAM BUTTON ON CONTROL MODULE (3) TIMES, LED WILL LIGHT UP, THEN PRESS BUTTON #1 ON ALL OF THE KEY FOBS THAT WILL BE ASSOCIATED WITH THE VEHICLE, (UP TO 4 KEY FOBS), WITHIN 10 SECONDS OF THE LED LIGHTING UP. TEST EACH KEY FOB BY LOCKING AND UNLOCKING THE SYSTEM TO ENSURE PROPER OPERATION.
NOTE: ALL KEY FOBS MUST BE PROGRAMMED AT THE SAME TIME USING THIS PROCEDURE. PROGRAMMING ONE KEY FOB AT A TIME WILL ERASE THE PREVIOUS PROGRAMMED KEY FOB.

UNCONTROLLED COPY

6720-4 CONTROL MODULE ONLY.
WITH KEY FOB (TRANSMITTER).
RIES:
E) OR 23-279 (12V ALKALINE)

THIS DOCUMENT IS IN ACCORDANCE WITH ASME Y14.15-2009		
LINEAR MEASURE: INCH		
UNLESS OTHERWISE SPECIFIED TOLERANCES ARE AS FOLLOWS:	IN	MM
ANGLES:	±2'	±2'
2 PLACE DEC.:	±.03	±.76
3 PLACE DEC.:	±.015	±.38
ALL HOLES:	±.005	±.13

DATE	3/29/2013
DR.BY	FLP
SCALE	FULL
CHK.BY	
NAME	KE
MATERIAL	— —

SUPERSEDES DRAWING 16720-5 SHEET 1 OF 2 DATED 1-10-07

REV	
	CONVERT
1	UPDATED
2	REVISED T
3	ADDED VIE
4	REMOVED

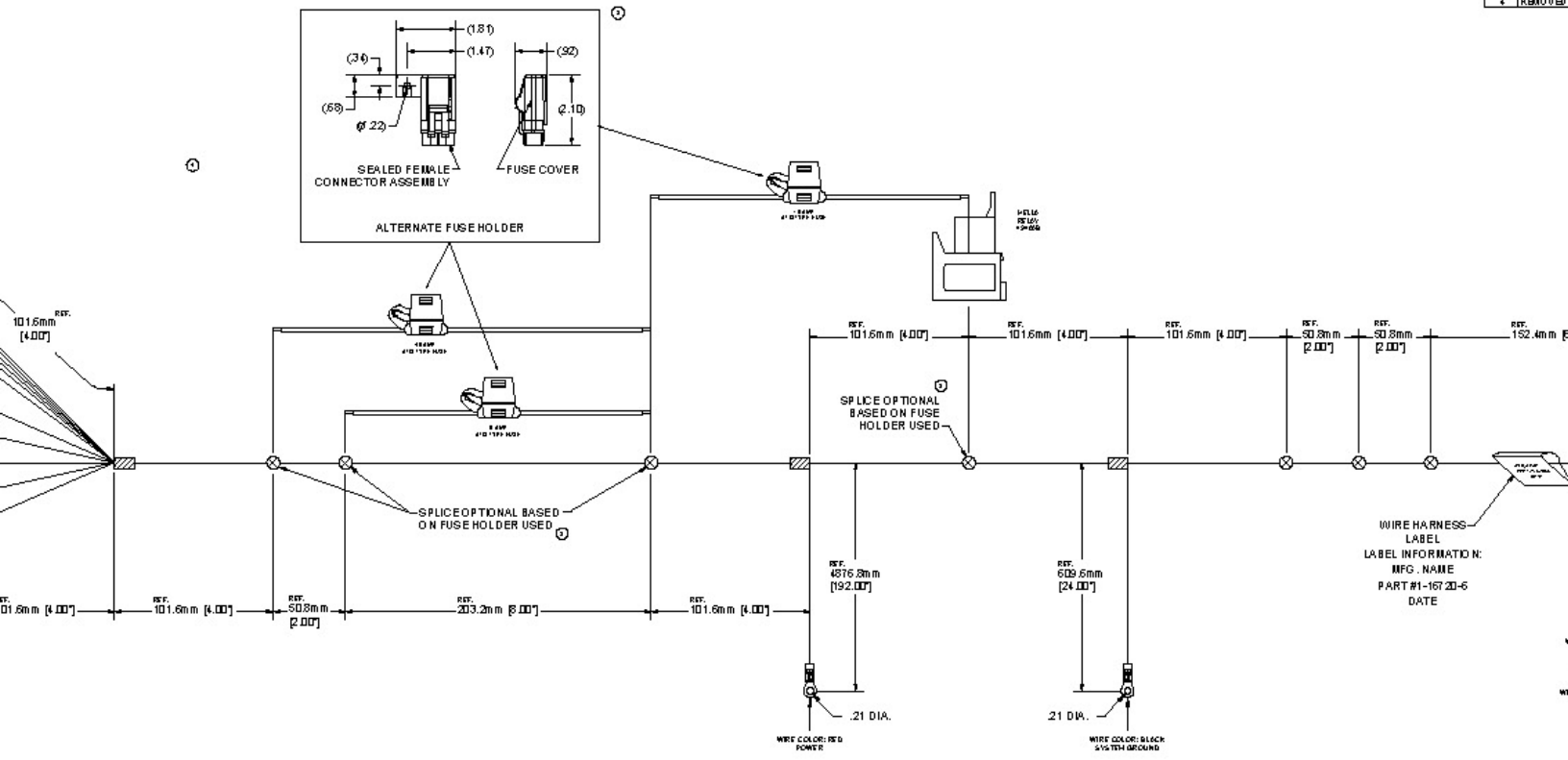

ALLATION PURPOSES
TROL MODULE)

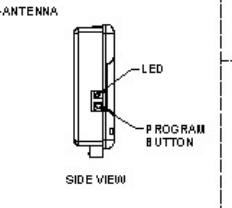

SIDE VIEW

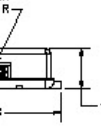

END VIEW

BOTTOM SIDE OF CASE

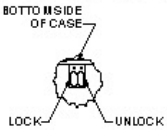

POSITIVE POLARITY SETTING VIEW A

BOTTOM SIDE OF CASE

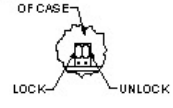

NEGATIVE POLARITY SETTING VIEW A

JUMPER SETTINGS FOR POSITIVE OR NEGATIVE POLARITY SYSTEMS. STANDARD CONTROL MODULE IS SET TO POSITIVE POLARITY SETTING.

INFORMATION FOR INSTALLATION PURPOSES
(16836-5DPK CONTROL MODULE)

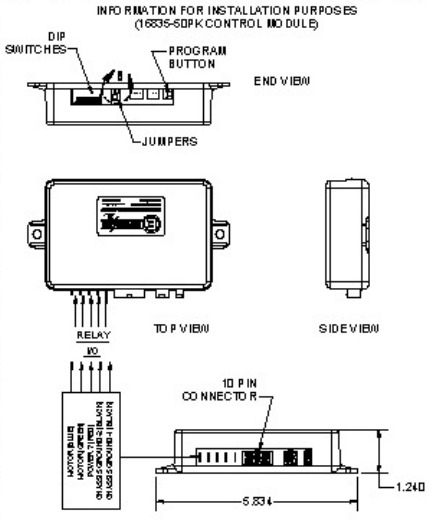

BOTTOM SIDE OF CASE

POSITIVE POLARITY SETTING VIEW B

BOTTOM SIDE OF CASE

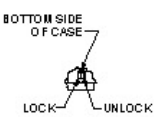

NEGATIVE POLARITY SETTING VIEW B

JUMPER SETTINGS FOR POSITIVE OR NEGATIVE POLARITY SYSTEMS. STANDARD CONTROL MODULE IS SET TO POSITIVE POLARITY SETTING.

NOTES:
1. DIMENSIONS ARE MEASURED FROM BAC
TO CENTER OF BREAKOUTS OR SPLICES.
2. HARNESS IS COIL-WRAPPED IN DIAMETE
THAN 10 INCHES AND SHIPPED IN A SEAL
3. HARNESS IS 100% CONTINUITY CHECKED

UNCONTROLLE

METRIC

DIMENSIONS ARE IN MI	
DIMENSION	TO
ALL DIMENSIONS	±

DIMENSIONS SHOWN IN [] A

SUPERSEDES DRAWING 1-16720-6 SHEET 1 OF 2 DATED 1-17-05.

ER ACTUATOR:

BLUE POWER ACTUATOR WIRE
ED POWER ACTUATOR WIRE

RED POWER ACTUATOR WIRE
LUE POWER ACTUATOR WIRE

ES IN LOCATIONS
BY SNAPPING
NDARY LOCK)
SHOWN
ECTOR

WIRE RETAINER
(SECONDARY LOCK)

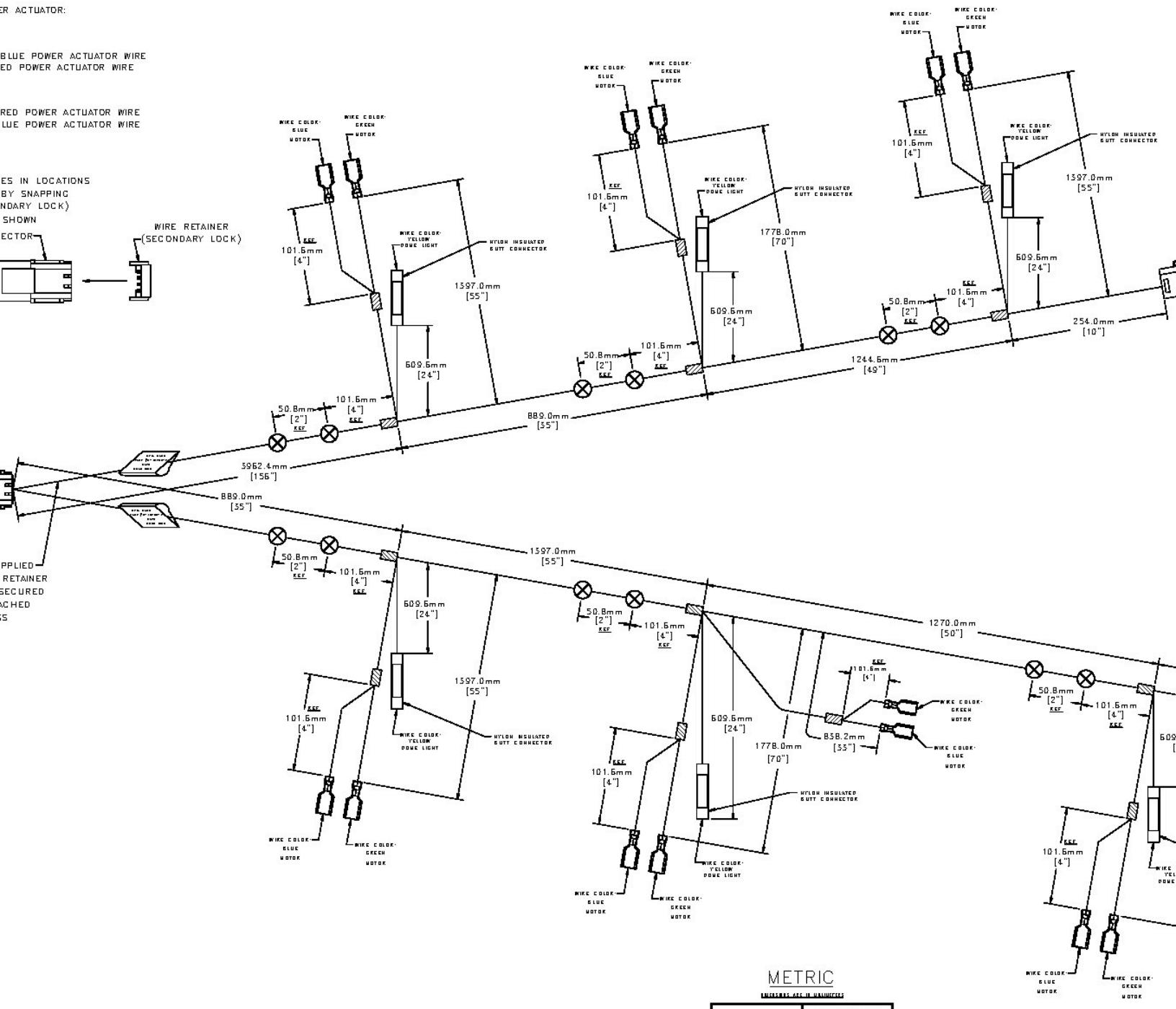

METRIC

DIMENSIONS ARE IN MILLIMETERS

DIMENSION	TOLERANCE (UNLESS OTHERWISE SPECIFIED)
ALL DIMENSIONS	±25.0 mm [±.99"]

DIMENSIONS SHOWN IN [ ] ARE IN INCHES

CTORS,
HE END OF TERMINALS.
METER NO LARGER
BAG.

UNCONTROLLED COPY

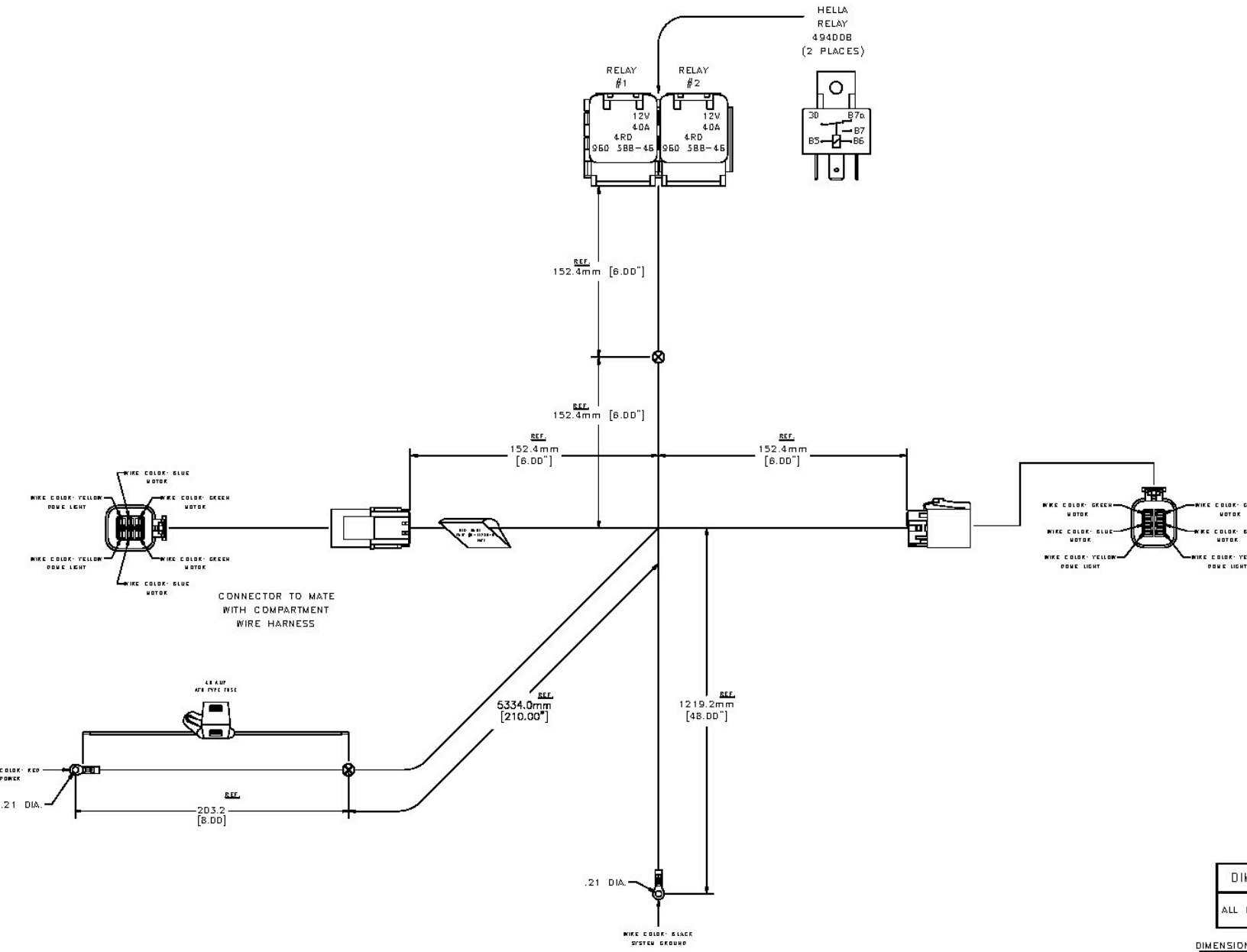

NECTOR

LARGER
BAG.

UNCONTROLLED COPY

SUPERSEDES DRAWING 2-16720-8 SHEET 1 OF 2 DATED 12-7-05.

...ts Manufacturing Company are strictly to be disseminated or reproduced without express written consent, ...whatsoever disclosed hereof in confidence and not to be used or permitted to be used in any way.
...ARD, INC. CO.

3 2

...WER ACTUATOR:

...D BLUE POWER ACTUATOR WIRE
... RED POWER ACTUATOR WIRE

...D RED POWER ACTUATOR WIRE
... BLUE POWER ACTUATOR WIRE

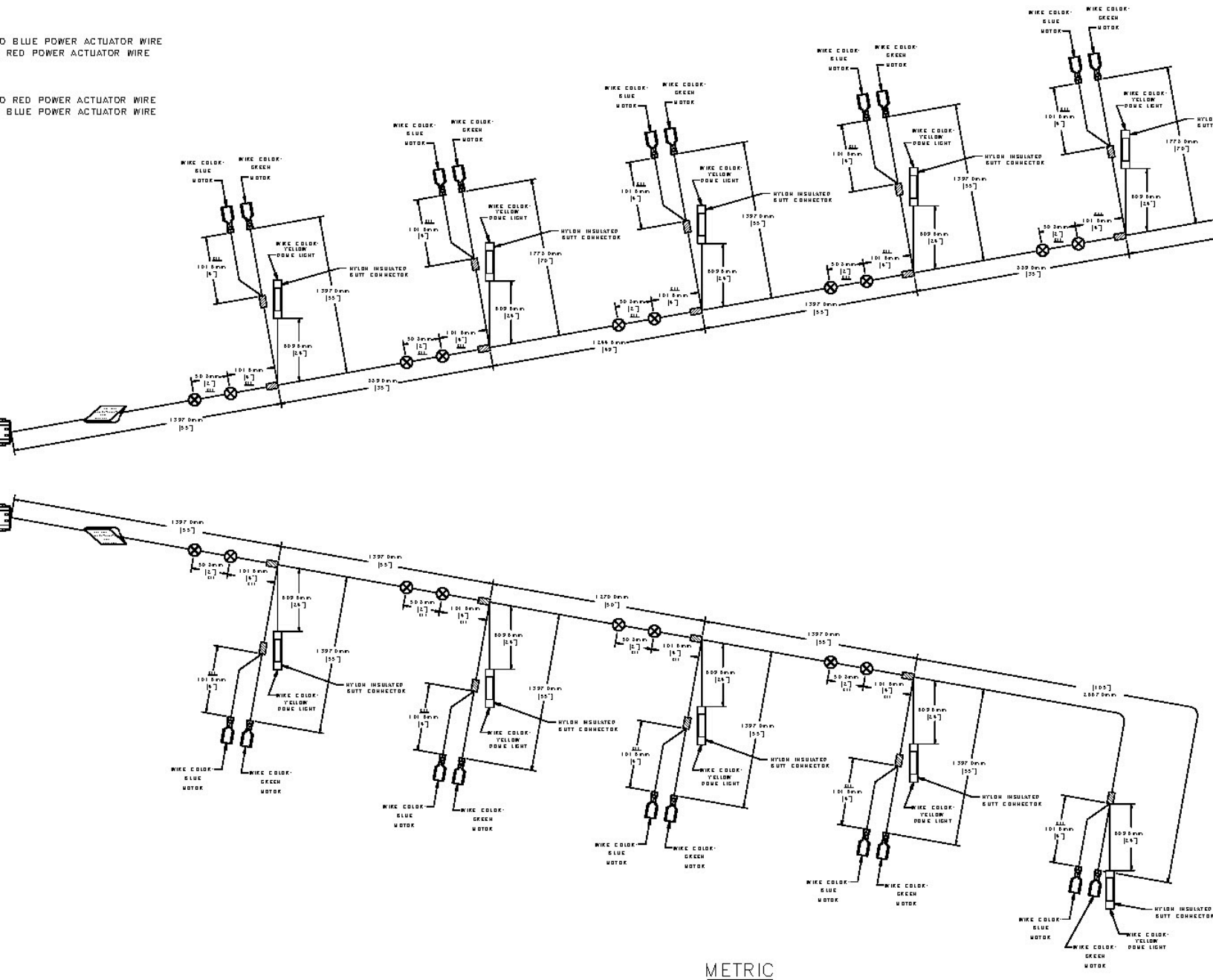

...NECTORS,
...D THE END OF TERMINALS.
...DIAMETER NO LARGER
...LY BAG.

UNCONTROLLED COPY

METRIC

DIMENSIONS ARE IN MILLIMETERS

DIMENSION	TOLERANCE (UNLESS OTHERWISE SPECIFIED)
ALL DIMENSIONS	±25.0 mm [±.99"]

DIMENSIONS SHOWN IN [ ] ARE IN INCHES

SUPERSEDES DRAWING 2-167 20-9 SHEET 1 OF 2 DATED 12-7-05.

3 2

CTUATOR:

POWER ACTUATOR WIRE
OWER ACTUATOR WIRE

POWER ACTUATOR WIRE
POWER ACTUATOR WIRE

ECTOR TO MATE
IENT WIRE HARNESS

ONNECTORS
ACE WITH
2-16720-7

F CONNECTORS,
AND TO THE END OF TERMINALS.
ED IN DIAMETER NO LARGER
ED POLY BAG.
ED.

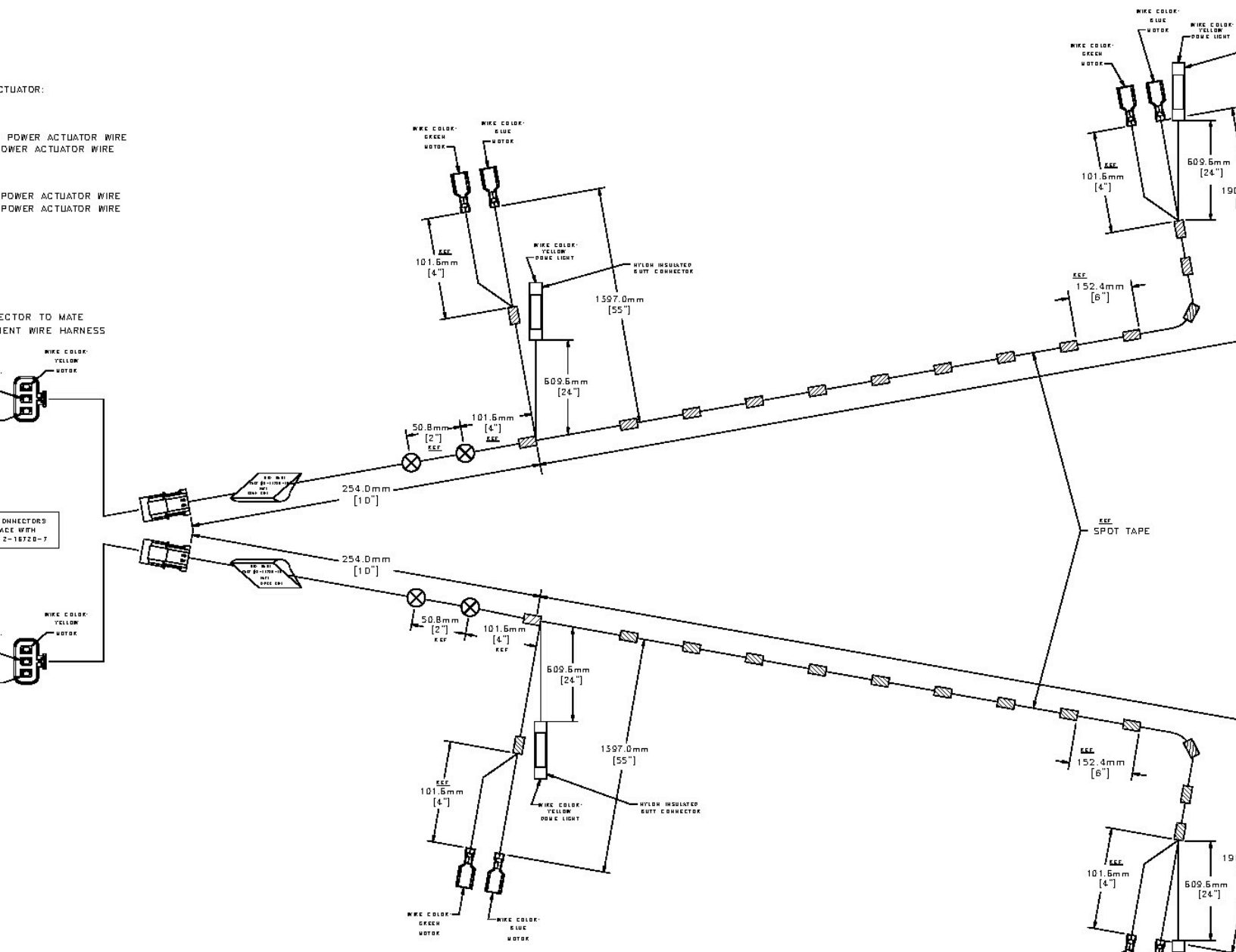

METRIC

DIMENSIONS ARE IN MILLIMETERS

DIMENSION	TOLERANCE (UNLESS OTHERWISE SPECIFIED)
ALL DIMENSIONS	±25.0 mm [±.99"]

DIMENSIONS SHOWN IN [ ] ARE IN INCHES

UNCONTROLLED COPY

SUPERSEDES DRAWING 2-16720-10 SHEET 1 OF 2 DATED 9-22-05.

ifications and engineering information disclosed hereon are the property of Eberhard Manufacturing Company and are not to be disseminated or reproduced without express written consent. the matter disclosed hereon. In accepting loan of this drawing, recipient agrees to keep it and the matter disclosed hereon in confidence and not to use nor permit their use in any way
n Company, 21944 Drake Road, Cleveland, Ohio 44149-9712 © 2013 EBERHARD MFG. CO.

REV	
	REVISED, REDRAWN AI

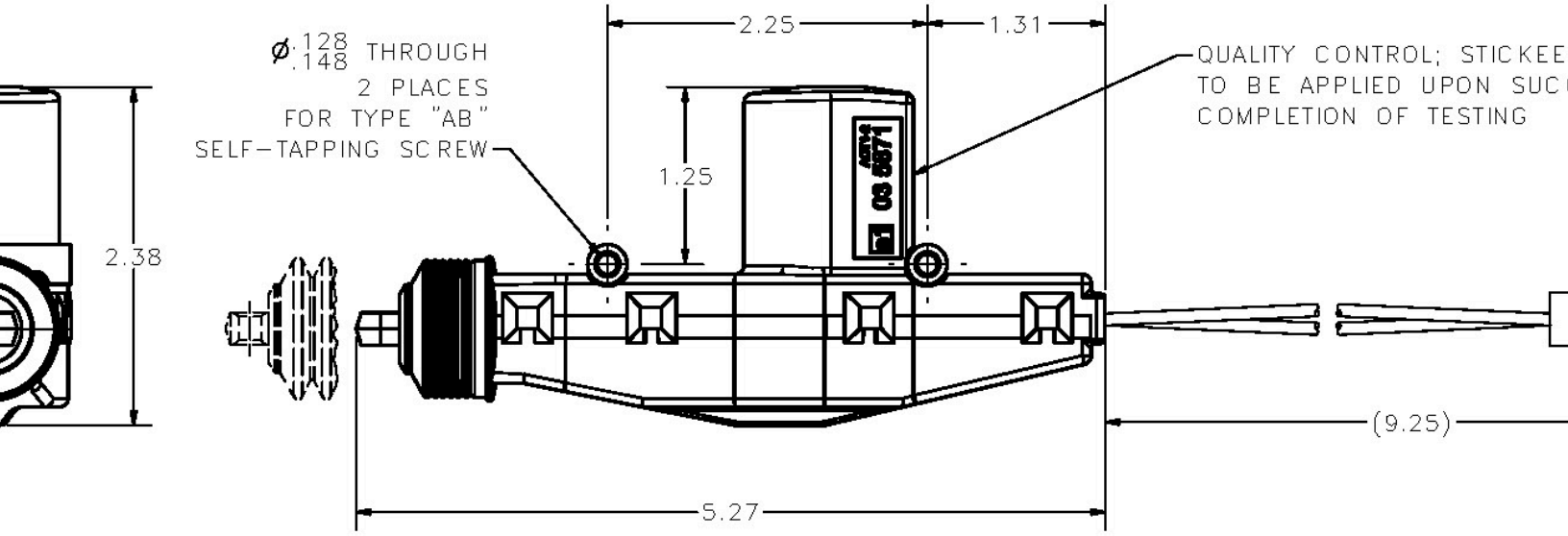

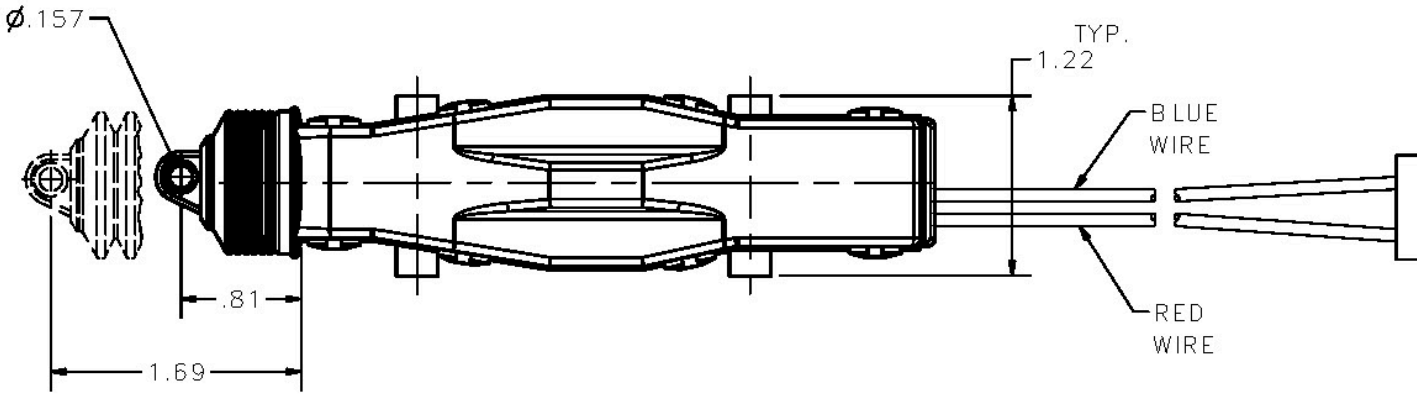

UNCONTROLLED COPY

3 VDC TO 13.7 VDC
: 4.5 A (MAX.)
−18.4° F TO +188.6° F

SUPERSEDES DRAWING 16720-1 SHEET 1 OF 2 DATED 3-14-03.

THIS DOCUMENT IS IN ACCORDANCE WITH ASME Y14.15-2009				
LINEAR MEASURE: INCH			DATE 3/29/2013	NAME
UNLESS OTHERWISE SPECIFIED TOLERANCES ARE AS FOLLOWS:			DR.BY FLP	
	IN	MM	SCALE FULL	MATERIAL
ANGLES:	±2°	±2°		
2 PLACE DEC.:	±.03	±.76	CHK.BY	
3 PLACE DEC.:	±.015	±.38		
ALL HOLES:	±.005	±.13		

EBI

cifications and engineering information disclosed herein are the property of Eberhard Manufacturing Company and are not to be disseminated or reproduced without the express written consent of the matter disclosed herein. In accepting loan of this drawing, recipient agrees to keep it and the matter disclosed herein in confidence and not to use or permit their use in any way
n Company, 21944 Drake Road, Cleveland, Ohio 44149-9712 © 2016 EBERHARD MFG. CO.

REVISION HISTORY	
REV	DESCRIPTION
	CONVERTED TO 3D

16746-50PK
POWER LOCK SWITCH KIT

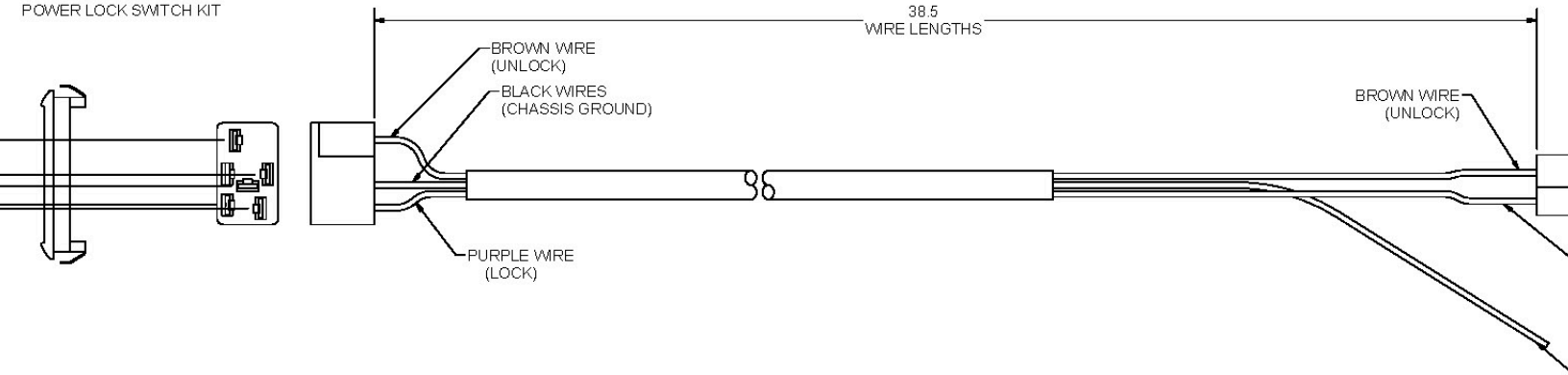

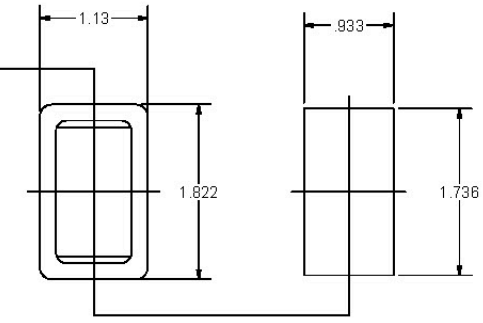

FRONT VIEW
OF TRIM PLATE

SUGGESTED OUTLINE
OF CUTOUT

NOTES:
1. BROWN WIRE (UNLOCK) - CONNECTS TO THE BLUE/WHITE WIRE IN THE 16720-6 CAB WIRE HARNESS.
   PURPLE WIRE (LOCK) - CONNECTS TO THE GREEN/WHITE WIRE IN THE 16720-6 CAB WIRE HARNESS.
   BLACK WIRES (CHASSIS GROUND)
   GRAY WIRE (ILLUMINATION) - CONNECTS TO THE PARKING LIGHT CIRCUIT ON THE VEHICLE.
2. JUMPERS ON THE 16720-50PK CONTROL MODULE WILL NEED TO BE CHANGED TO NEGATIVE POLARITY.
3. 1-16746-50PK POWER LOCK SWITCH KIT AND 1-16746-P5 CONNECTOR PACKAGE TO BE SHIPPED LOOSE, BULK PACKED.

16746-P5
CONNECTOR PACKAGE

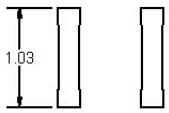

16746-30
BUTT SPLICE
CONNECTOR
2 REQ'D

16746-31
INSULATE
FOR #10 S
2 REQ'D

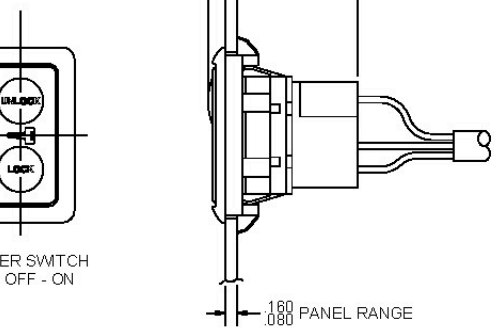

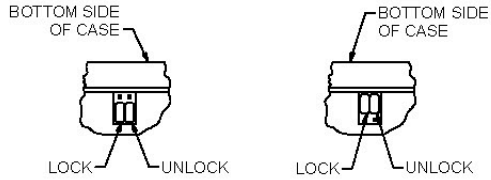

POSITIVE
POLARITY SETTING

NEGATIVE
POLARITY SETTING

16720-50PK CONTROL MODULE
JUMPER SETTINGS FOR POSITIVE OR NEGATIVE POLARITY SYSTEMS. STANDARD CONTROL MODULE IS SET TO POSITIVE POLARITY SETTING.

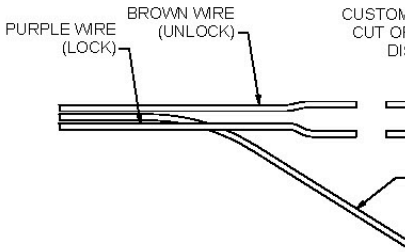

NOTE:
CUSTOMER TO CUT OFF TERMINAL E
ATTACH WIRES TO THE 16720-6 CAB
HARNESS USING CONNECTORS SUP
16746-P5 CONNECTOR PACKAGE.

UNCONTROLLED COPY

SUPERSEDES DRAWING 16746-U DATED 12-17-03

THIS DOCUMENT IS IN ACCORDANCE WITH ASME Y14.15-2009

UNLESS OTHERWISE SPECIFIED TOLERANCES ARE AS FOLLOWS:

	IN	MM
ANG LES:	±2'	±2'
2 PLACE DEC.:	±.03	±.76
3 PLACE DEC.:	±.015	±.38
ALL HOLES:	±.005	±.13

DATE 1/29/2016
DR BY FLP
SCALE FULL
CHK BY
NAME
MATERIAL

...ications and engineering information disclosed hereon are the property of Eberhard Manufacturing Company and are not to be disseminated or reproduced without express written consent. ...the matter disclosed hereon. In accepting loan of this drawing, recipient agrees to keep it and the matter disclosed hereon in confidence and not to use or permit their use in any way ...n Company. 21944 Drake Road, Cleveland, Ohio 44149-9712 © 2016 EBERHARD MFG. CO.

REVISION HISTORY		
REV	DESCRIPTION	E
	CONVERTED TO 3D	5.

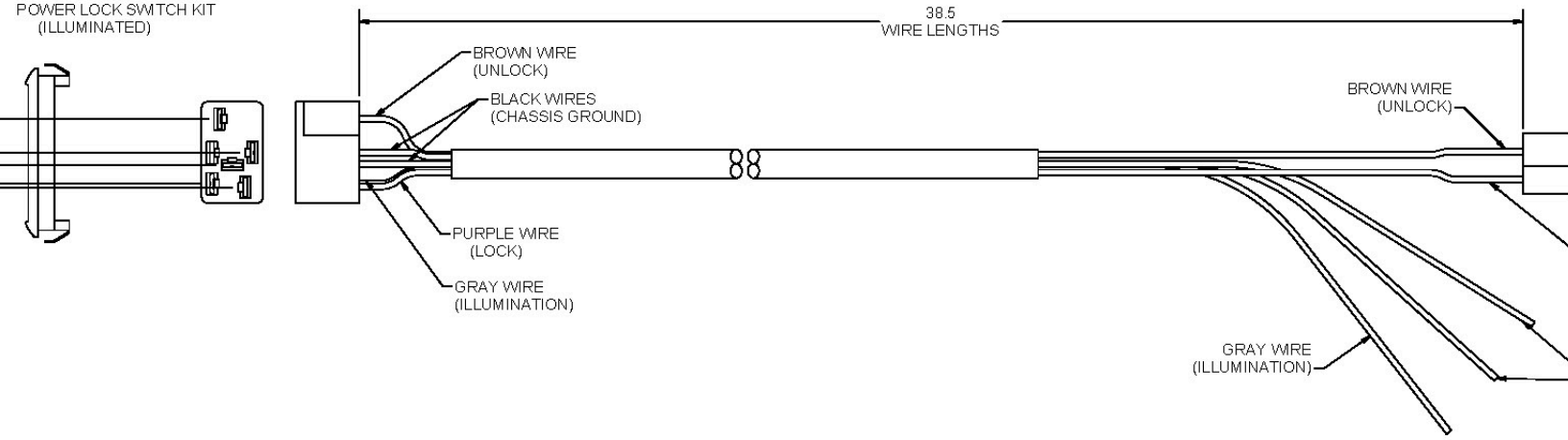

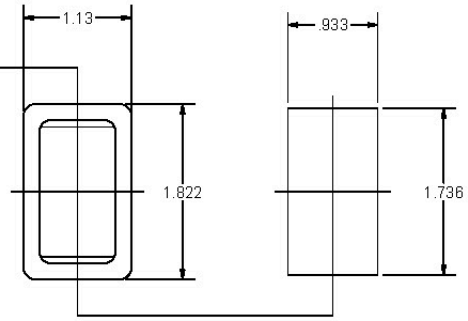

NOTES:
1. BROWN WIRE (UNLOCK) - CONNECTS TO THE BLUE/WHITE WIRE IN THE 16720-6 CAB WIRE HARNESS.
   PURPLE WIRE (LOCK) - CONNECTS TO THE GREEN/WHITE WIRE IN THE 16720-6 CAB WIRE HARNESS.
   BLACK WIRES (CHASSIS GROUND)
   GRAY WIRE (ILLUMINATION) - CONNECTS TO THE PARKING LIGHT CIRCUIT ON THE VEHICLE.
2. JUMPERS ON THE 16720-50PK CONTROL MODULE WILL NEED TO BE CHANGED TO NEGATIVE POLARITY.
3. 1-16746-50PK POWER LOCK SWITCH KIT AND 1-16746-P5 CONNECTOR PACKAGE TO BE SHIPPED LOOSE, BULK PACKED.

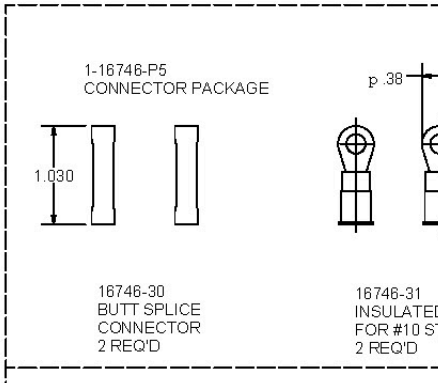

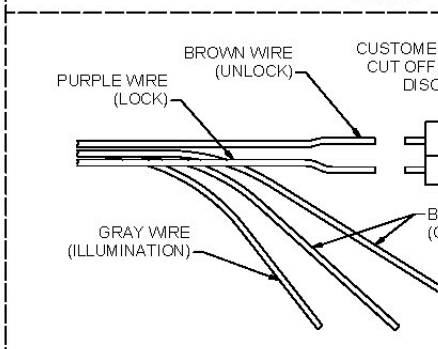

NOTE:
CUSTOMER TO CUT OFF TERMINAL B
ATTACH WIRES TO THE 16720-6 CAB W
HARNESS USING CONNECTORS SUPP
1-16746-P5 CONNECTOR PACKAGE.

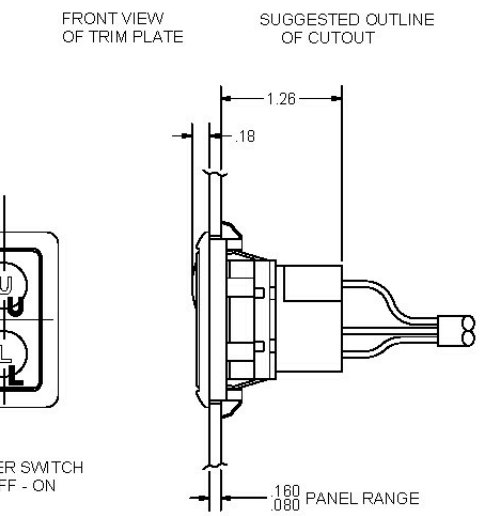

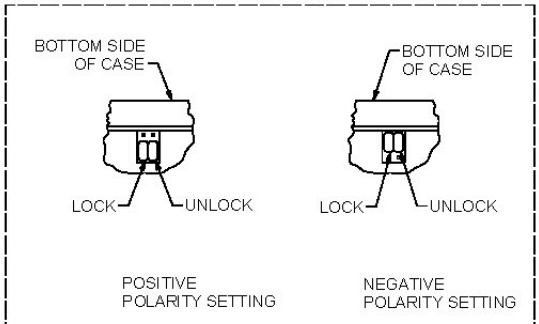

16720-50PK CONTROL MODULE
JUMPER SETTINGS FOR POSITIVE OR NEGATIVE POLARITY SYSTEMS. STANDARD CONTROL MODULE IS SET TO POSITIVE POLARITY SETTING.

UNCONTROLLED COPY

SUPERSEDES DRAWING 1-16746-U DATED 12-17-03

THIS DOCUMENT IS IN ACCORDANCE WITH ASME Y14.15-2009		
LINEAR MEASURE: INCH	DATE 1/30/2016	NAME P (ILLUM
UNLESS OTHERWISE SPECIFIED TOLERANCES ARE AS FOLLOWS: IN MM	DR BY FLP	
ANGLES: ± 2° ± 2°	SCALE FULL	MATERIAL -
2 PLACE DEC.: ± .03 ± .76	CHK BY	
3 PLACE DEC.: ± .015 ± .38		
ALL HOLES: ± .005 ± .13		

Eberhard Manufacturing Company
POWER-UP Locking System – Key Cylinder

Typical assembly of a power locking key cylinder:

Configuration of power locking key cylinders will vary depending on the application. The ability to make various handle configurations power locking will need to be reviewed and verified on a product by product basis.

For reference only, the components are to be assembled as shown to enable proper function with the power actuators. After assembly, the key cylinder and remote locking cam are to be able to rotate 90° clockwise and counterclockwise independently. The key is to be removable in one position only. This will enable the power actuator to operate the cam when the key is not installed.

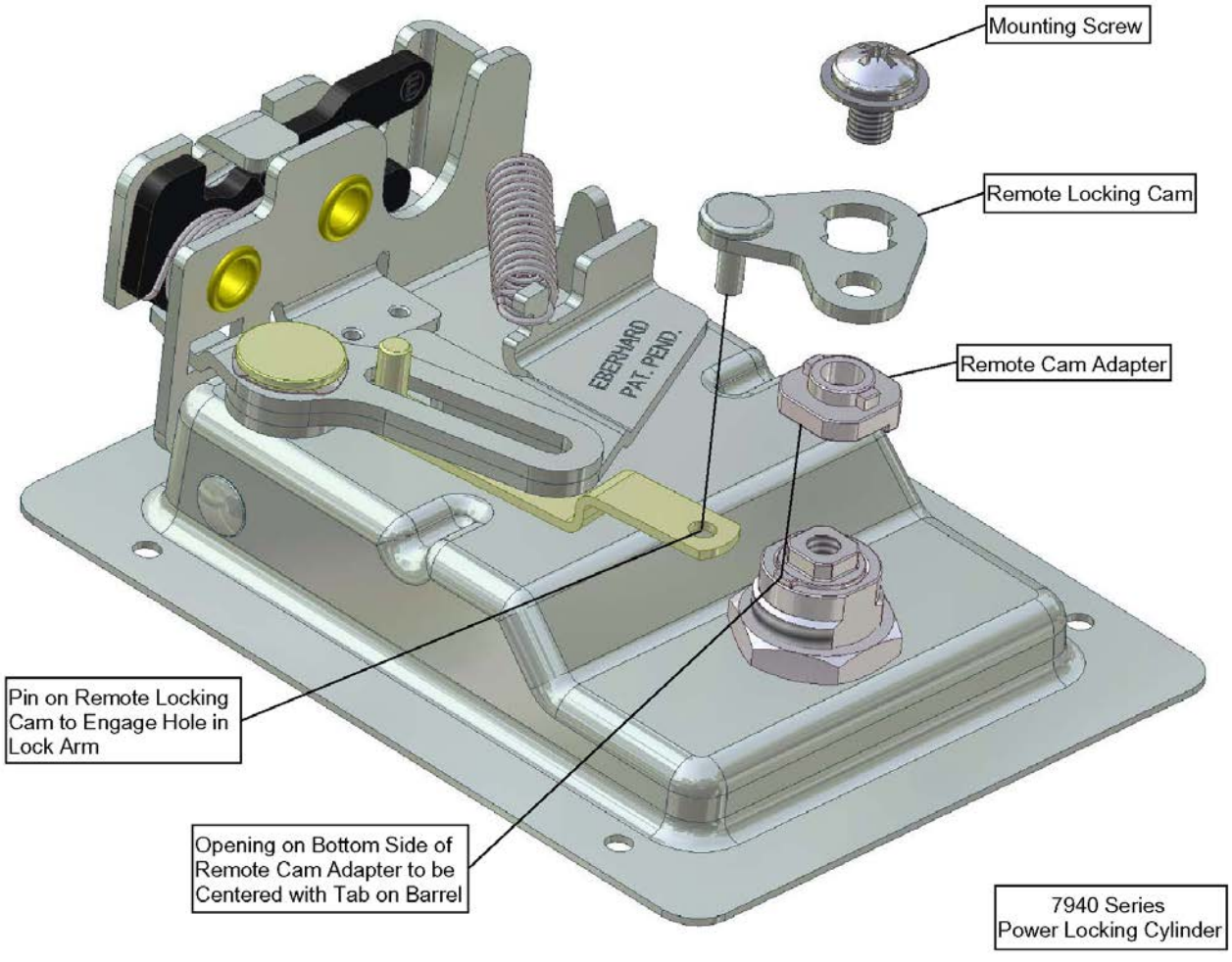

P COMPONENTS

DESCRIPTION

1) Power Lock Activator
2) Power Activator Mtg. Screw
Phillips Pan head #8–18 Type AB Thread

Control Module Kit includes:
1) Control Module
2) Key Fob Transmitter

nts (for 1–7 activators)
1) Cab Wiring Harness
1) Compartment Wiring Harness

ents (for 8–18 activators)
Expansion Relay Harness
Expansion Compartment Wiring Harness

inated power toggle switch kit can be
ab actuation.

dule to additional key fobs, press the
trol module three times. LED will light
(#1) on the key fob(s).

up for positive or negative

esigned for customer requests.

n is independent from the OEM power
vice or maintenance, compartments
separate and unique key fob that
OEM remote.

NICAL DATA

battery installed.
ilable.

8.8 VDC to 13.7 VDC
4.5 A (max)
-18.4° F to +188.6° F
7.868 lbf.

EBERHARD®

Industrial, Vehicular & Specialty Systems

A Division of The Eastern Company

EBERHARD MANUFACTURING COMPANY

21944 Drake Road
Cleveland, Ohio 44149
Phone: (440) 238–9720
Toll Free: (800) 334–6706
Fax: (440) 572–2732
www.eberhard.com

ISO-9001 Registered

A Wholly Owned Subsidiary of
The Eastern Company

EBERHARD HARDWARE MFG., LTD.

Box 367
Tillsonburg, Ontario N4G 4H8
Phone: (519) 842–8457
Toll Free: (800) 567–3344
Fax: (519) 688–0575
www.eberhardcanada.com

ISO-9001 Registered

For Eberhard's complete catalog of over 2400 latching systems, please contact our sales department.

© 2004, Eberhard Mfg. Company, a division of The Eastern Company.

THE EASTERN COMPANY

POWER

LOCKING SYSTEMS

EBERH

POWER UP™

LOCKING SYSTEMS FROM EBERHARD

The POWER UP Locking System can be mated with many popular Eberhard latches including single and multipoint paddles, Paddle, Rotary, "T" and "D" handle style latches. Consult the factory to select the proper connecting components to "Power Up" your equipment.

CONVENIENCE&SEC

LOCK UP TO 18 INDIVIDUAL
WITH ONE TOUCH OF A BUTTON!

n be
OEM
onal
to meet
andard
endent
ing
eparate
tenance
n unique
rness is
standard
key fob.

- **SECURITY**
  All latches are locked at one time.
- **CONVENIENCE**
  Simple one-button touch secures all latches with a range of up to 150 feet.
- **RELIABILITY**
  Proven operation of components in simulated cycle-testing up to 200,000 cycles.
- **DURABLE CONSTRUCTION**
  Sealed actuators and insulated plug-in connections.
- **COMPATIBILITY**
  Operates with existing power lock systems. Ideal on Service Bodies, Ambulances, RVs, Buses, or their Single or Multi-Latch power locking systems.

THE EBERHARD CONTROL MODULE incorporates a lock pulse timer that provides a .4 second pulse from the control module to the actuators. If the buttons on the key fob (transmitter) are held down for an extended period, the lock pulse timer will prevent the actuators from being damaged.

The control module incorporates a time-out feature that eliminates damage to the actuators by shutting down the systems for thirty seconds if the buttons on the key fob (transmitter) are activated more than eight times in a thirty-second period. After the thirty-second time-out period, the system will function as normal.

The Power-Up control module can be programmed to accept up to four key fobs to operate the same power system.

If a key fob is lost or damaged, the control module can be programmed to accept a new key fob signal.

POWER UP LOCKING SYST
service bodies, ambulances, RVs, or
power locking of compartments.

Eberhard has for over 140 years be
manufacturer of vehicular and indust
rescue equipment, utility and van bo
equipment, as well as tonneau covers
electrical panels, electronic enclosur

POWER™