CONFIDENTIAL NOTICE: This drawing and the designs, specifications and engineering information disclosed hereon are the property of Eberhard Manufacturing Company and are not to be disseminated or reproduced without express written consent. The drawing is loaned in confidence and then only for consideration of the matter disclosed hereon. In accepting loan of this drawing, recipient agrees to keep it and the matter disclosed hereon in confidence and not to use nor permit their use in any way detrimental to Eberhard Manufacturing Company, Division of the Eastern Company. 21944 Drake Road, Cleveland, Ohio 44149-9712 © 2014 EBERHARD MFG. CO.

REVISION HISTORY

REV	DESCRIPTION	EN	DATE	REV BY	APVD BY
-	REVISED, REDRAWN AND CONVERTED TO 3D	GS08	6-14-13		
1	REVISED NOTE, REMOVED PATENT PENDING	GM7	4-8-19	FLP	MR

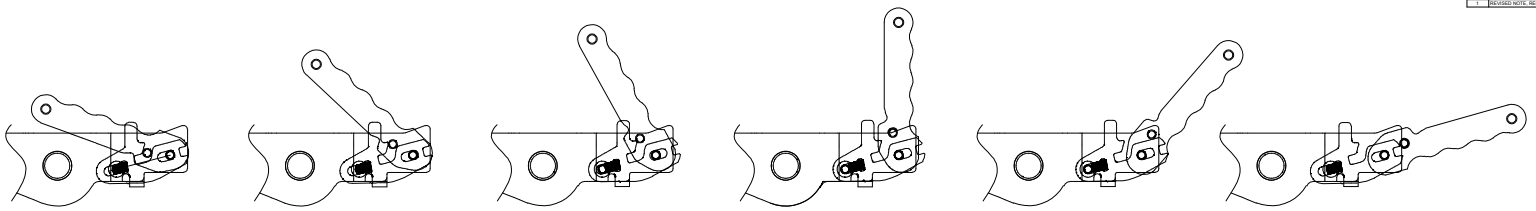

HANDLE FULLY RETRACTED AND LOCKED

RANGE OF HANDLE MOTION
SCALE: 1/2

HANDLE FULLY EXTENDED AND LOCKED

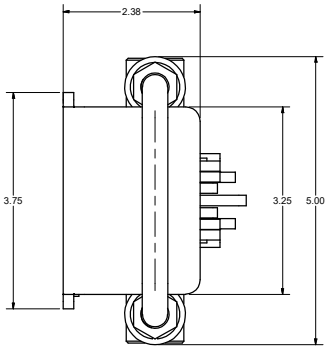

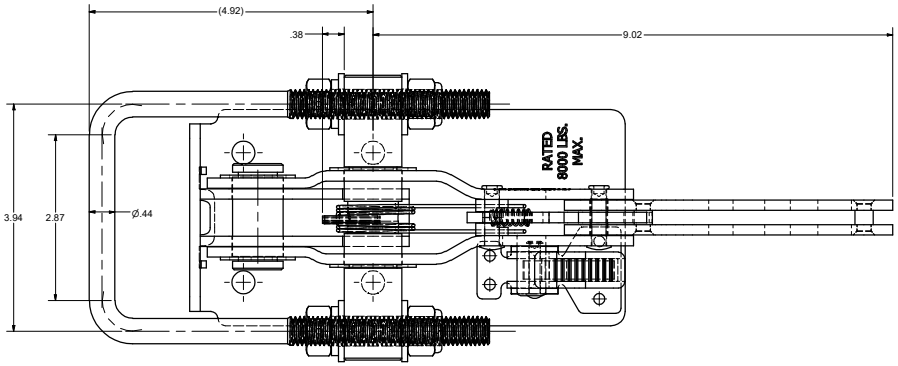

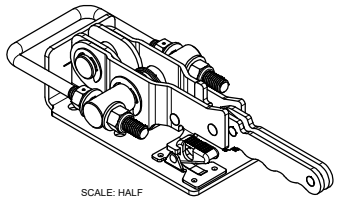

SCALE: HALF

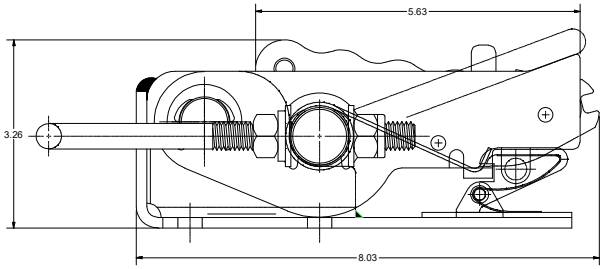

FOLDED AND LOCKED VIEW

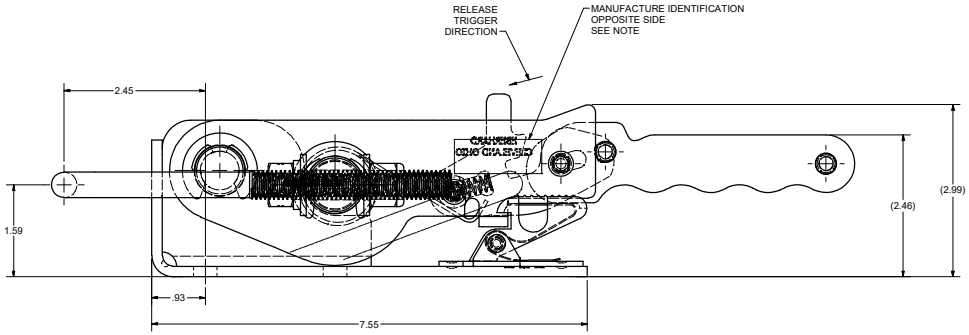

NOTES:

1. MANUFACTURES IDENTIFACTION STENCIL .120 X .030 DEEP LETTERS.
   TEXT TO READ: "EBERHARD CLEVELAND, OHIO"

2. FINISH: E-COAT, FC (23)

CUSTOMER PRINT
SHEET 1 OF 2

SUPERSEDES DRAWING 970 SHEET 1 OF 2 DATED 9-11-09.

THIS DOCUMENT IS IN ACCORDANCE WITH ASME Y14.5-2009

LINEAR MEASURE: INCH

UNLESS OTHERWISE SPECIFIED TOLERANCES ARE AS FOLLOWS

	IN	MM
ANGLES:	± 2°	± 2°
2 PLACE DEC.:	± .03	± .76
3 PLACE DEC.:	± .015	± .38
ALL HOLES:	± .005	± .13

DATE 6/14/2013
DR BY FLP
SCALE FULL
CHK BY

EBERHARD MANUFACTURING CO.
DIVISION OF
THE EASTERN COMPANY
CLEVELAND, OHIO 44149-9712

NAME
HEAVY DUTY DRAW LATCH WITH 7/16" DIA U-BOLT - FOLDING HANDLE

MATERIAL

PART NUMBER
970

C:\Working_Folder\Archive\Proj\970\970 SHT 1.dw