CONFIDENTIAL NOTICE: This drawing and the designs, specifications and engineering information disclosed hereon are the property of Eberhard Manufacturing Company and are not to be disseminated or reproduced without express written consent. The drawing is loaned in confidence and then only for consideration of the matter disclosed hereon. In accepting loan of this drawing, recipient agrees to keep it and the matter disclosed hereon in confidence and not to use nor permit their use in any way detrimental to Eberhard Manufacturing Company, Division of the Eastern Company. 21944 Drake Road, Cleveland, Ohio 44149-9712. © 2019 EBERHARD MFG. CO.

REVISION HISTORY

REV	DESCRIPTION	EN	DATE	REV. BY	APV'D. BY
	RELEASED: PP11167 REV E	5915	08/09/2019	MAM	LSW
1	PIN INSTALLED PER PP11636 REV. G	6073	10/14/2022	DJK	MR

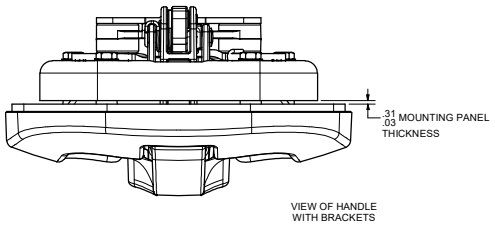

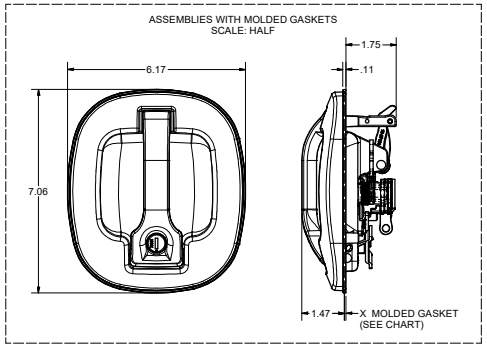

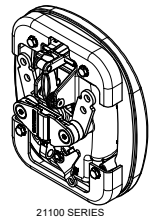

21100 SERIES
MOUNTING
BRACKETS
(REF. 20-21100-MHPK)
SCALE: HALF

NOTE:
MOUNTING BRACKETS AND (4) MOUNTING SCREWS
SHIPPED LOOSE IN A SECURED POLY BAG.

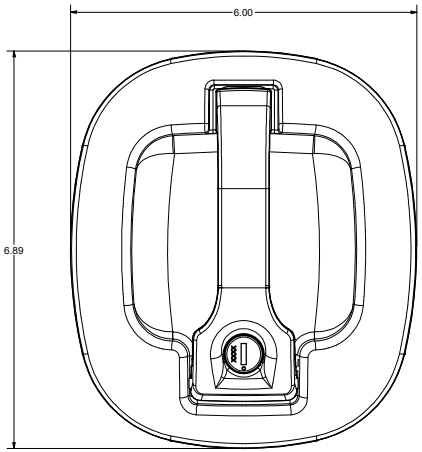

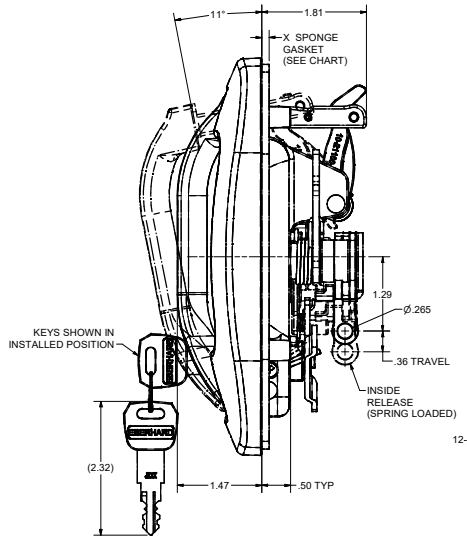

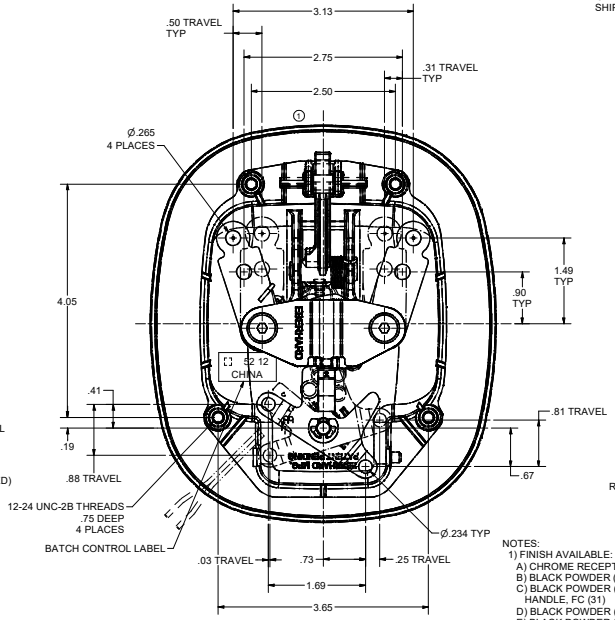

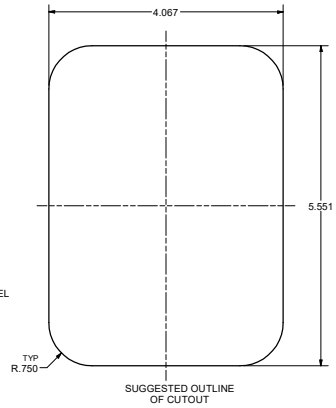

SUGGESTED OUTLINE
OF CUTOUT

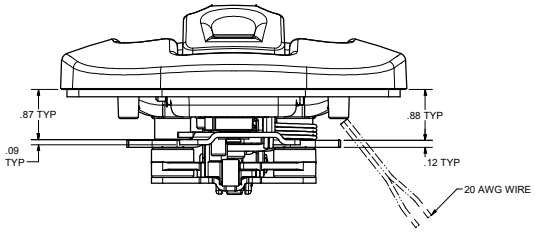

LED LIGHT NOTES:
COLOR: DAYLIGHT (6500k)
CRI: 80±2
VIEWING ANGLE: 120°
INPUT VOLTAGE: 12VDC
POWER: 0.9W ±5%
AMP DRAW: 71-79 mA
LUMINOUS OUTPUT: 100 LUMENS ±5
OPERATING TEMPERATURE: -20° TO 180°F
LIFETIME: L70 GREATER THAN 50,000
STANDARDS: RoHS, MADE WITH UL RECOGNIZED COMPONENTS

NOTES:
1) FINISH AVAILABLE:
A) CHROME RECEPTACLE & HANDLE, FC (03)
B) BLACK POWDER (POLY SEMI-GLOSS) RECEPTACLE & HANDLE, FC (30)
C) BLACK POWDER (POLY SEMI-GLOSS) RECEPTACLE & CHROME HANDLE, FC (31)
D) BLACK POWDER (TEXTURED) RECEPTACLE & HANDLE, FC (42)
E) BLACK POWDER (TEXTURED) RECEPTACLE & CHROME HANDLE, FC (35)
2) LUBRIPLATE AERO OR EQUIVALENT GREASE USED ON ALL MOVING COMPONENTS AT CONTACT POINTS
DOW CORNING #44 GREASE USED ON CYLINDER WAFERS
3) MOUNTING BRACKETS AND MOUNTING SCREWS ARE FURNISHED WITH ZINC FINISH.
4) MAXIMUM TORQUE FOR MOUNTING SCREWS: 35/40 in./lbs.
5) AVAILABLE KEY NO'S: J201 THRU J210, J223 & J236.
EXAMPLE ORDER P/N: 20-21100 LED-201A-03

FINISH CODE
KEY LOCKING/BRACKET STYLE
GASKET TYPE
KEY NUMBER

CUSTOMER PRINT
SHEET 1 OF 3

PART NUMBER	FINISH	X DIM.	GASKET TYPE	MOUNTING HARDWARE
20-21100 LED-XXXA	03, 30, 31, 42, 35	.13	30 DUROMETER EPDM CLOSED CELL SPONGE	20-21100-MHPK
20-21100 LED-XXXB	03, 30, 31, 42, 35	.41	50 DUROMETER ETHYLENE VINYL ACETATE SPONGE	20-21100-MHPK
20-21100 LED-XXXC	03, 30, 31, 42, 35	.06	TPU - MOLDED	20-21100-MHPK

THIS DOCUMENT IS IN ACCORDANCE WITH ASME Y14.5-2009
UNLESS OTHERWISE SPECIFIED TOLERANCES ARE AS FOLLOWS:

	IN	MM
ANGLES:	± 2°	± 2°
2 PLACE DEC.:	± .03	± .76
3 PLACE DEC.:	± .005	± .38
ALL HOLES:	± .005	± .13

DATE 8/02/2019
DR.BY MMALLOY
SCALE FULL
CHECK

EBERHARD MANUFACTURING CO.
DIVISION OF
THE EASTERN COMPANY
CLEVELAND, OHIO 44149-9712

NAME: LED LOCKING HANDLE ASSEMBLY WITH INSIDE RELEASE, ALTERNATE HOLE LOCATION MOUNTING BRACKETS

MATERIAL: ---------

PART NUMBER: 20-21100 LED-A CHART

C:\Working_Folder\Archive\Proj\20-21100\LED\20-21100 LED-A CHART SH1.sldw