CONFIDENTIAL NOTICE: This drawing and the designs, specifications and engineering information disclosed hereon are the property of Eberhard Manufacturing Company and are not to be disseminated or reproduced without express written consent. The drawing is loaned in confidence and then only for consideration of the matter disclosed hereon. In accepting loan of this drawing, recipient agrees to keep it and the matter disclosed hereon in confidence and not to use nor permit their use in any way detrimental to Eberhard Manufacturing Company, Division of the Eastern Company. 21944 Drake Road, Cleveland, Ohio 44149-9712 © 2014 EBERHARD MFG. CO.

REVISION HISTORY

REV	DESCRIPTION	EN	DATE	REV BY	APVD BY
	REVISED AND REDRAWN	5641	2-14-14		
1	REVISED NOTE, REVISED VIEW	5792	3-3-17	FLP	MR
2	REVISED NOTE AND TITLE	5811	7-14-17	FLP	MR

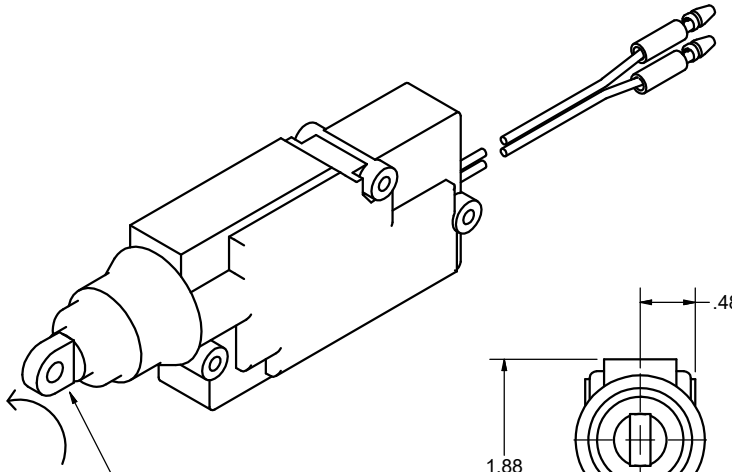

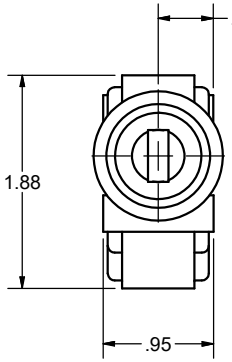

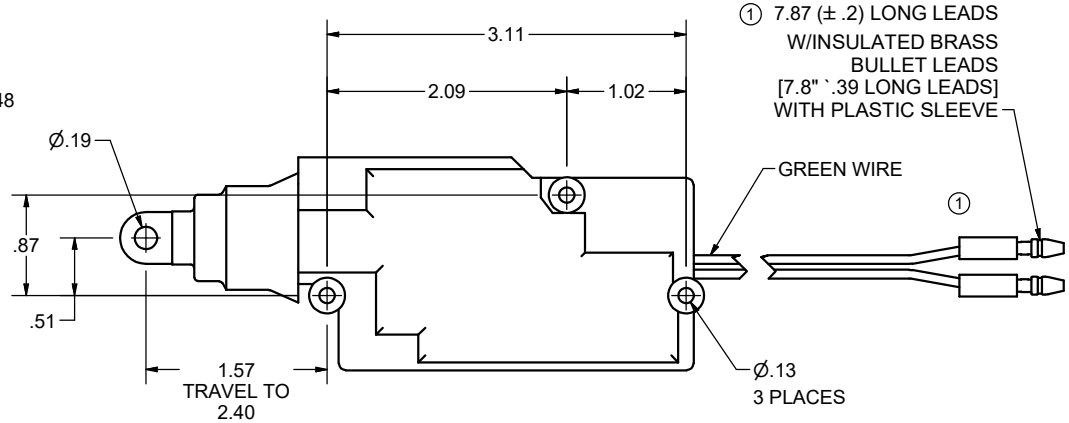

PIN-OUT DIAGRAM:
BLUE: LOCK (MASTER)
GREEN: UNLOCK (MASTER)

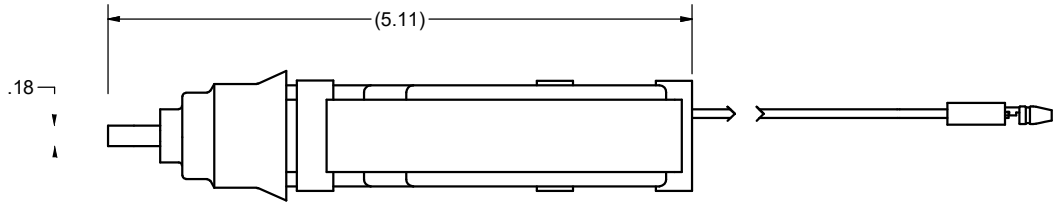

SPECIFICATIONS:
GEAR MOTOR DRIVEN DIRECTED CLUTCH ACTUATOR
FORCE: 45 NEWTONS
VOLTAGE: 9 TO 16 VDC
NOMINAL CURRENT DRAW: 2A
ENDURANCE: 30,000 CYCLES
OPERATIONAL TEMPERATURE RANGE: -30 TO +85 DEG. C

② -OVERLOAD PROTECTED LOCK MOTOR - PTC (POSITIVE TEMPERATURE COEFFICENT) THERMAL PROTECTION
-WATER RESISTANT BOOT SEALED
-REINFORCED ENGINEERING PLASTIC CASING FOR WEATHER RESISTANCE
-GUIDED SHAFT FOR SMOOTH OPERATION AND REDUCED SHAFT TWISTING
-ROTATABLE & CHANGEABLE HEAD
-BUILT-IN 200mm LEADS

MANUFACTURING PRINT
INTERNAL USE ONLY

EBERHARD MANUFACTURING CO.
DIVISION OF
THE EASTERN COMPANY
CLEVELAND, OHIO 44149-9712

UNLESS OTHERWISE SPECIFIED TOLERANCES ARE AS FOLLOWS:

ANGLES:	± 2˚
2 PLACE DEC.:	± .03
3 PLACE DEC.:	± .015
ALL HOLES:	± .005

DATE 2/14/2014
DR BY FLP
SCALE FULL
CHK BY

NAME: MOTOR DRIVEN ACTUATOR WITH THERMAL PROTECTION ②

MATERIAL: ------

PART NUMBER: 16952

SUPERSEDES DRAWING 16952 SHEET 2 OF 2 DATED 2-5-2010.

C:\Working_Folder\Archive\Pro\1\116XXX\169XX\16952\16952.idw